STANDARD DRAWINGS INDEX

STREET DESIGN

S-100	STREET SECTIONS
S-101	ALLEY AND 3' RIBBON GUTTER
S-102	STANDARD KNUCKLE LOCAL STREET 60' R/W; 36' CURB TO CURB
S-103	STANDARD KNUCKLE COLLECTOR STREET 64' R/W; 40' CURB TO CURB
S-104	CUL-DE-SAC 60' AND 64' RIGHT OF WAY
S-105	OFFSET CUL-DE-SAC 60' AND 64' RIGHT OF WAY
S-106	HALF WIDTH STREET LOCAL
S-107	DRIVEWAY SPACING
S-108	UNDERGROUND UTILITY LOCATIONS
S-109	FIRE HYDRANT AND UTILITY POLE LOCATION

STREET CONSTRUCTION

SC-200	8" CURB AND GUTTER
SC-201	6" CURB AND GUTTER
SC-202	CURB ONLY
SC-203	SIDEWALK (CURB AJACENT)
SC-204	SIDEWALK (PROPERTY LINE)
SC-205	SIDEWALK (FOOTHILL BLVD.)
SC-206	MEANDERING SIDEWALK
SC-207	CURB ADJACENT SIDEWALK INTERSECTION
SC-208	PROPERTY LINE ADJACENT SIDEWALK INTERSECTION
SC-209	EXPANSION AND WEAKENED PLANE JOINT
SC-210	TREE WELL AND COVERS
SC-211	DRIVEWAY APPROACH (RESIDENTIAL CURB SIDEWALK)
SC-212	DRIVEWAY APPROACH (RESIDENTIAL-PROPERTY LINE SIDEWALK)
SC-213	DRIVEWAY APPROACH (COMMERCIAL)
SC-214	DRIVEWAY WITH CURB RETURNS
SC-215	CURB RAMP
SC-216	CROSS GUTTER AND FILLET
SC-217	SPECIAL CROSS GUTTER STEEP INTERSECTION GRADES
SC-218	ALLEY INTERSECTION
SC-219	CONCRETE BUS PAD
SC-220	BUS STOP WITH TURNOUT
SC-221	CURB CORE DRAINAGE

STREET CONSTRUCTION (CONT.)

SC-222	INTERSECTION SIGHT DISTANCE
SC-223	SIGN POST INSTALLATION
SC-224	MAIL BOX
SC-225	TYPE 'L' MARKERS
SC-226	OBSTRUCTION SIGN POST
SC-227	BARRICADE POST AND SIGN
SC-228	UTILITY LOCATIONS ON CURB SIDEWALK
SC-229	CURB ADDRESS
SC-230	CENTERLINE TIE STANDARD ON 4" X 6" CARD
SC-231	TRENCH WORK
SC-232	PLATE BRIDGING
SC-233	ASPHALT CONCRETE DIKE
SC-234	GUARD POST
SC-235	CURB RETURN RADII AND R/W CORNER CUT-BACK

STREET LIGHTS

SL-300	STREET LIGHT LOCATION
SL-301	STREET LIGHT GUIDELINES
SL-302	STREET INSTALLATION
SL-303	STREET LIGHT PEDESTAL WIRING DIAGRAM
SL-304	INSTALLATION DETAIL
SL-305	DRIVE APPROACH RELOCATION
SL-306	UNDERGROUND ELECTRICAL FEED POINT

TRAFFIC SIGNALS

TS-400	TRAFFIC SIGNAL PULLBOX (IMPROVED AREAS)
TS-401	TRAFFIC SIGNAL PULLBOX (UNIMPROVED AREAS)
TS-402	TYPE 170 CONTROLLER CABINET FOUNDATION
TS-403	TRAFFIC SIGNAL STREET NAME SIGN

STORM DRAIN

REFER TO STANDARD PLANS FOR PUBLIC WORKS CONSTRUCTION (LATEST EDITION)

WATER

W-700	1” WATER METER CONNECTION
W-701	2” WATER METER CONNECTION
W-702	3” WATER SERVICE AND LARGER METER AND VAULT INSTALLATION
W-703	WATER VAULT
W-704	PAVEMENT MARKERS AT FIRE HYDRANTS
W-705	WET BARREL FIRE HYDRANT INSTALLATION
W-706	DRY BARREL FIRE HYDRANTS INSTALLATION
W-707	6” BLOW OFF INSTALLATION
W-708	2” END OF LINE BLOW OFF
W-709	1” AND 2” COMBINATION AIR VALVE
W-710	4” COMBINATION AIR VALVE
W-711	AIR VALVE ENCLOSURE
W-712	REDUCED PRESSURE DEVICE
W-713	LOCATION AND SCREENING FOR ABOVE GROUND BACKFLOW PREVENTORS AND DETECTOR CHECK VALVE
W-714	FIRE LINE INSTALLATION DOUBLE DETECTOR CHECK ASSEMBLY
W-715	HOT TAP ON WATER MAIN
W-716	SERVICE TAP 1” AND 2” FOR STEEL PIPE WELDING
W-717	SAMPLE STATION
W-718	1” WATER LINE FOR FIRE SPRINKLER ASSEMBLY OFF EXISTING 1” DOMESTIC LINE (APPLIES ONLY TO RESIDENTIAL SERVICE LINES)
W-719	VALVE BOX RISER INSTALLATION
W-720	STEEL PIPE CASING INSTALLATION
W-721	SIPHON DETAIL
W-722	INVERTED SIPHON DETAIL
W-723	CONCRETE THRUST BLOCKS FOR PIPLINES, CLASS 200 P.S.I. MAX
W-724	RESTRAINED JOINT AND WELDED JOINT THRUST PROTECTION
W-725	WATER AND SEWER SEPARATION REQUIREMENTS
W-726	ANCHOR BLOCK ASSEMBLY FOR 6” THROUGH 16” PIPE
W-727	METER SERVICES 3” OR LARGER BEHIND CURB
W-728	PRESSURE REGULATOR STATION

SANITARY SEWER

SS-200	SEWER GENERAL NOTES
SS-201	STD. MANHOLE FRAME, COVER & REINFORCED CONCRETE COLLAR
SS-202	STANDARD PRECAST IN PLACE MANHOLE FOR SEWER
SS-203	STANDARD MANHOLE FOR 6” TO 36” PIPE
SS-204	TYPICAL SEWER MANHOLE BASES
SS-205	SEWER TERMINAL CLEAN-OUT
SS-206	SEWER LATERAL
SS-207	SEWER SADDLE
SS-208	TAPPING EXISTING SEWER MAIN
SS-209	SEWER LATERAL CONNECTIONS TYPE A AND TYPE B

LANDSCAPE & IRRIGATION

IRR-500	TYPICAL HOUSE CONNECTION
IRR-501	CONTROLLER PLACEMENT DETAIL
IRR-502	RAIN SENSOR
IRR-503	RAIN GUARD
IRR-504	TYPICAL BACKFLOW “PRIVATE”
IRR-505	TYPICAL HOUSE CONNECTION ATMOSPHERIC VACCUM BREAKER
IRR-506	AUTOMATIC ANTI-SIPHON VALVE
IRR-507	MULTI-OUTLET EMITTER
IRR-508	POT IRRIGATION
IRR-509	TREE WELL BUBBLER INSTALLATION
IRR-510	LAWN/4”, 6”, 8” POP-UP HEAD
IRR-511	SHRUB SPRAY HEAD
IRR-512	BUBBLER HEAD
PLT-550	TREE GRATE LOCATIONS
PLT-551	REDWOOD HEADERBOARD

LANDSCAPE MAINTENACE DISTRICT

LMD-IRR-600	IRRIGATION CONTROLLER
LMD-IRR-601	TIPPING BUCKET
LMD-IRR-602	TYPICAL BACKFLOW

LANDSCAPE MAINTENACE DISTRICT (CONT.)

LMD-IRR-603	FLOW METER/MASTER VALVE
LMD-IRR-604	REMOTE CONTROL VALVE-BRASS
LMD-IRR-605	DRIP CONTROL ZONE KIT
LMD-IRR-606	WIRE CONNECTOR
LMD-IRR-607	“SCOTCH” SEALING PACK
LMD-IRR-608	TRENCHING DETAIL
LMD-IRR-609	SLEEVING DETAIL
LMD-IRR-610	PIPING AND WIRING
LMD-IRR-611	SPLICE BOX ASSEMBLY
LMD-IRR-612	GATE VALVE
LMD-IRR-613	THRUST BLOCK ASSEMBLY
LMD-IRR-614	QUICK COUPLER
LMD-IRR-615	TRIPLE SWING JOINT
LMD-IRR-616	POP-UP SHRUB HEAD
LMD-IRR-617	EMITTER ON POLYFLEX RISER
LMD-IRR-618	DEEP ROOT WATERING
LMD-IRR-619	TECHLINE CV ISLAND LAYOUT
	TECHLINE CV END FEED LAYOUT
	TECHLINE CV CENTER FEED LAYOUT
LMD-PLT-650	TREE PLACEMENT
LMD-PLT-651	TREE PLANTING AND TREE STAKING
LMD-PLT-652	TREE GUYING
LMD-PLT-653	SLOPE TREE PLANTING
LMD-PLT-654	PALM TREE PLANTING
LMD-PLT-655	SHRUB PLANTING
LMD-PLT-656	SHRUB PLANTING ON SLOPE
LMD-PLT-657	GROUND COVER PLANTING
LMD-PLT-658	VINE PLANTING
LMD-PLT-659	VINE POCKET
LMD-PLT-660	TREE PRUNING
LMD-PLT-661	PALM PRUNING
LMD-PLT-662	CONCRETE HEADER
LMD-PLT-663	TYPICAL ROCK TREATMENT ASSEMBLY
LMD-PLT-664	BOULDER PLACEMENT
	BOULDER GROUPING
LMD-PLT-665	SIGHT DISTANCE

BLOCK WALLS

BW-800	8’ HIGH BLOCK WALL
BW-801	8’ HIGH BLOCK PILASTER

STANDARD DRAWINGS INDEX

LANDSCAPE & IRRIGATION

IRR-500	TYPICAL HOUSE CONNECTION
IRR-501	CONTROLLER PLACEMENT DETAIL
IRR-502	RAIN SENSOR
IRR-503	RAIN GUARD
IRR-504	TYPICAL BACKFLOW “PRIVATE”
IRR-505	TYPICAL HOUSE CONNECTION ATMOSPHERIC VACUUM BREAKER
IRR-506	AUTOMATIC ANTI-SIPHON VALVE
IRR-507	MULTI-OUTLET EMITTER
IRR-508	POT IRRIGATIION
IRR-509	TREE WELL BUBBLER ISTALLATION
IRR-510	LAWN/4”, 6”, 8” POP-UP HEAD
IRR-511	SHRUB SPRAY HEAD
IRR-512	BUBBLER HEAD
PLT-550	TREE GRATE LOCATIONS
PLT-551	REDWOOD HEADERBOARD

LANDSCAPE MAINTENACE DISTRICT

LMD-IRR-600	IRRIGATION CONTROLLER
LMD-IRR-601	TIPPING BUCKET
LMD-IRR-602	TYPICAL BACKFLOW
LMD-IRR-603	FLOW METER/MASTER VALVE
LMD-IRR-604	REMOTE CONTROL VALVE-BRASS
LMD-IRR-605	DRIP CONTROL ZONE KIT
LMD-IRR-606	WIRE CONNECTOR
LMD-IRR-607	“SCOTCH” SEALING PACK
LMD-IRR-608	TRENCHING DETAIL
LMD-IRR-609	SLEEVING DETAIL
LMD-IRR-610	PIPING AND WIRING
LMD-IRR-611	SPLICE BOX ASSEMBLY
LMD-IRR-612	GATE VALVE
LMD-IRR-613	THRUST BLOCK ASSEMBLY
LMD-IRR-614	QUICK COUPLER
LMD-IRR-615	TRIPLE SWING JOINT
LMD-IRR-616	POP-UP SHRUB HEAD
LMD-IRR-617	EMITTER ON POLYFLEX RISER
LMD-IRR-618	DEEP ROOT WATERING
LMD-IRR-619	TECHLINE CV ISLAND LAYOUT TECHLINE CV END FEED LAYOUT TECHLINE CV CENTER FEED LAYOUT
LMD-PLT-650	TREE PLACEMENT
LMD-PLT-651	TREE PLANTING AND TREE STAKING
LMD-PLT-652	TREE GUYING
LMD-PLT-653	SLOPE TREE PLANTING
LMD-PLT-654	PALM TREE PLANTING
LMD-PLT-655	SHRUB PLANTING
LMD-PLT-656	SHRUB PLANTING ON SLOPE

LANDSCAPE MAINTENANCE DISTRICT (CONT.)

LMD-PLT-657	GROUND COVER PLANTING
LMD-PLT-658	VINE PLANTING
LMD-PLT-659	VINE POCKET
LMD-PLT-660	TREE PRUNING
LMD-PLT-661	PALM PRUNING
LMD-PLT-662	CONCRETE HEADER
LMD-PLT-663	TYPICAL ROCK TREATMENT ASSEMBLY
LMD-PLT-664	BOULDER PLACEMENT BOULDER GROUPING
LMD-PLT-665	SIGHT DISTANCE

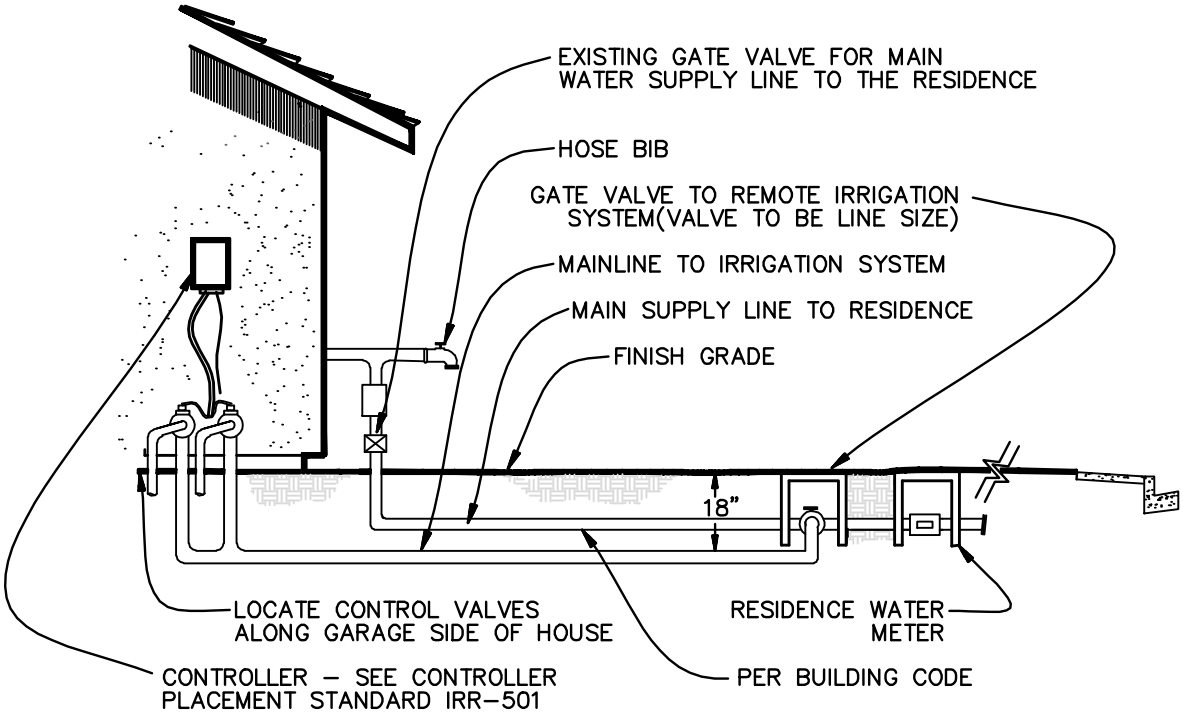

NOT TO SCALE

APPROVED BY:

6/28/16

P.W. DIRECTOR/CITY ENGINEER DATE

REVISIONS			
DATE	BY	MARK	APPROVED

TYPICAL HOUSE CONNECTION

CITY OF RIALTO, CALIFORNIA
PUBLIC WORKS DEPARTMENT
ENGINEERING DIVISION

STANDARD NO. IRR–500 | SHT 1 OF 1

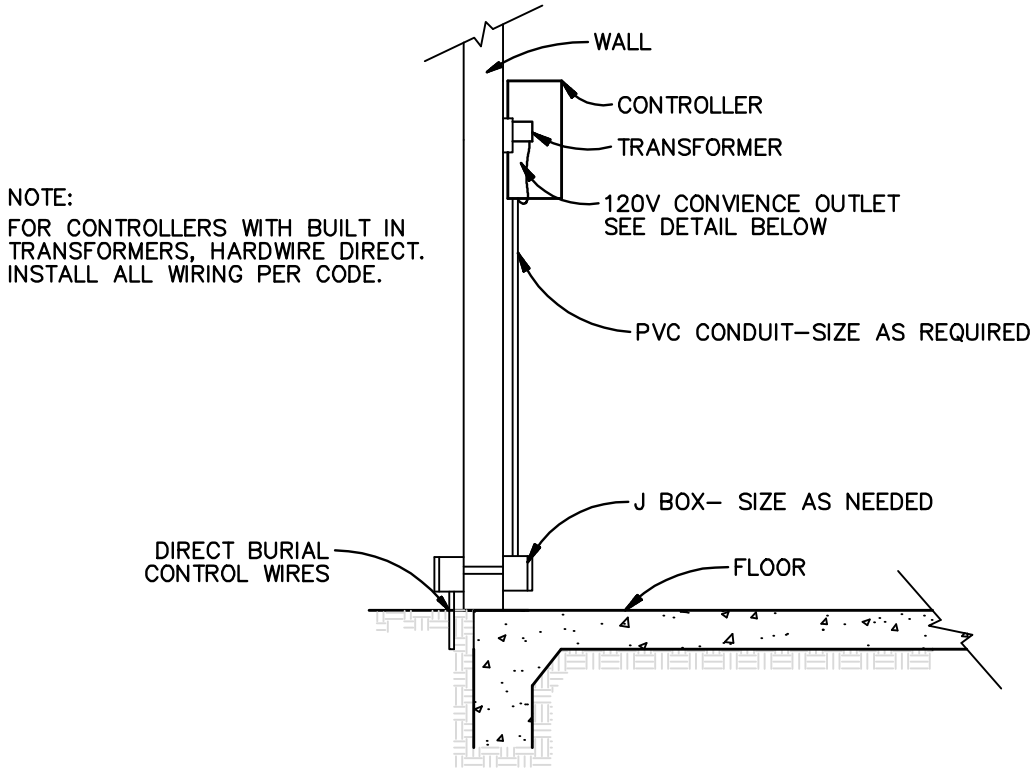

NOTE:
FOR CONTROLLERS WITH BUILT IN TRANSFORMERS, HARDWIRE DIRECT. INSTALL ALL WIRING PER CODE.

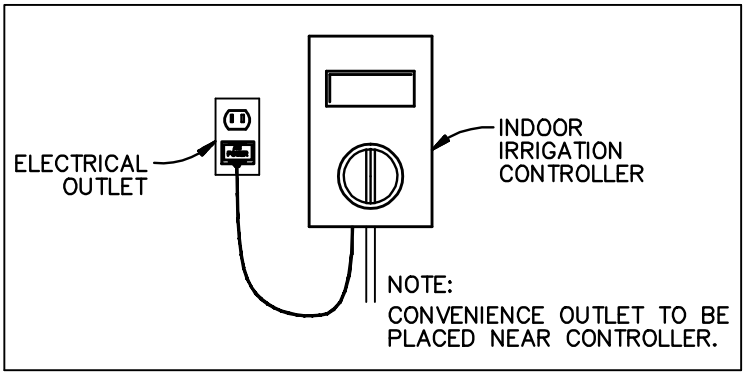

CONTROL DETAIL

NOT TO SCALE

APPROVED BY:

6/28/16

P.W. DIRECTOR/CITY ENGINEER DATE

REVISIONS			
DATE	BY	MARK	APPROVED

CONTROLLER PLACEMENT DETAIL

CITY OF RIALTO, CALIFORNIA
PUBLIC WORKS DEPARTMENT
ENGINEERING DIVISION

STANDARD NO. IRR–501 | SHT 1 OF 1

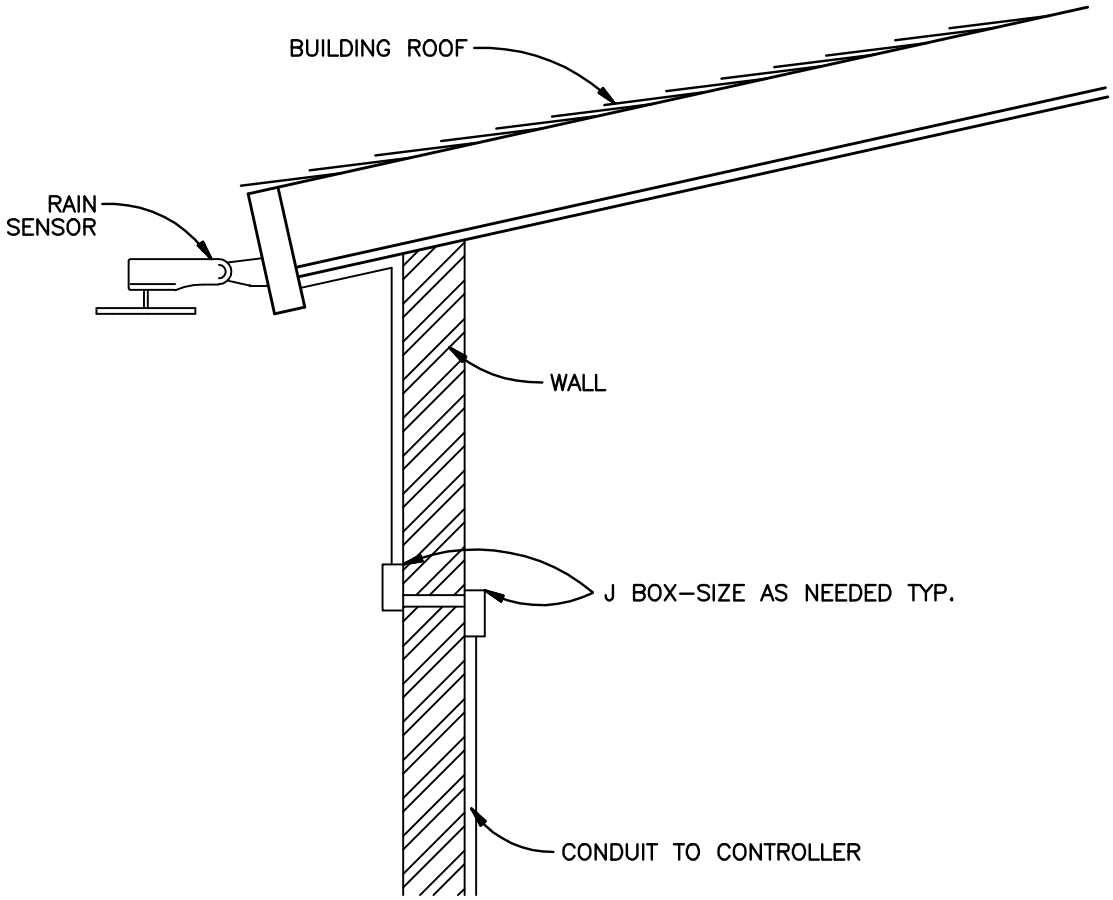

NOT TO SCALE

APPROVED BY:

6/28/16

P.W. DIRECTOR/CITY ENGINEER DATE

RAIN SENSOR

REVISIONS			
DATE	BY	MARK	APPROVED

CITY OF RIALTO, CALIFORNIA
PUBLIC WORKS DEPARTMENT
ENGINEERING DIVISION

STANDARD NO. IRR–502 | SHT 1 OF 1

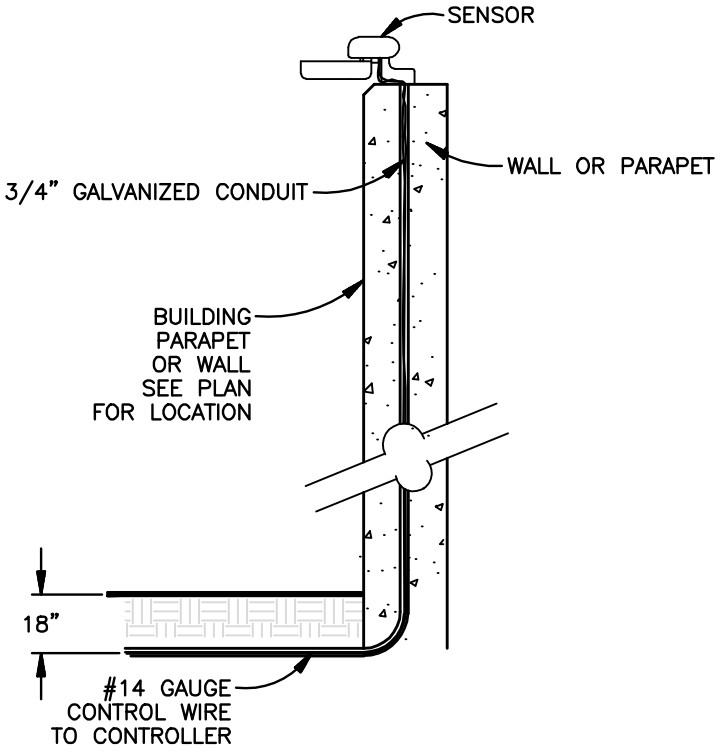

NOT TO SCALE

APPROVED BY:

6/28/16

P.W. DIRECTOR/CITY ENGINEER DATE

RAIN GUARD

REVISIONS

DATE	BY	MARK	APPROVED

CITY OF RIALTO, CALIFORNIA
PUBLIC WORKS DEPARTMENT
ENGINEERING DIVISION

STANDARD NO. IRR-503 | SHT 1 OF 1

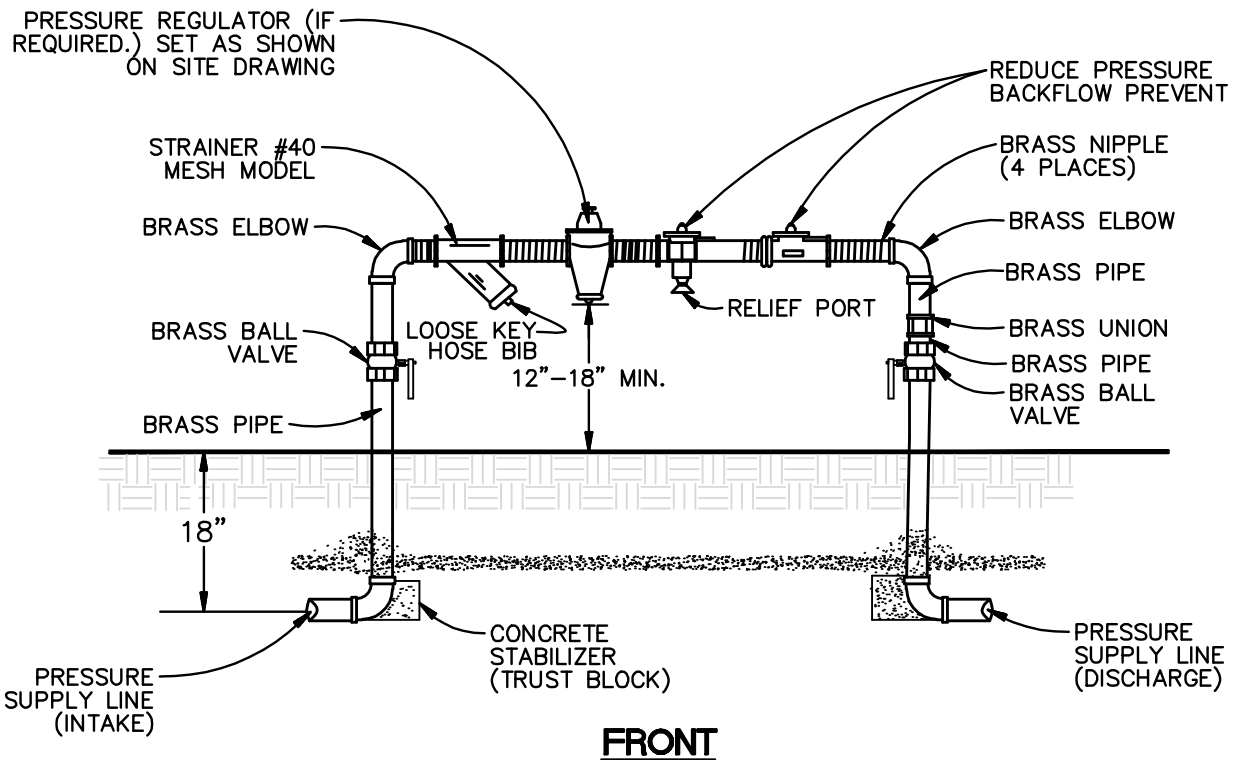

FRONT

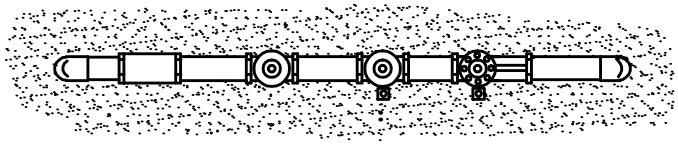

PLAN

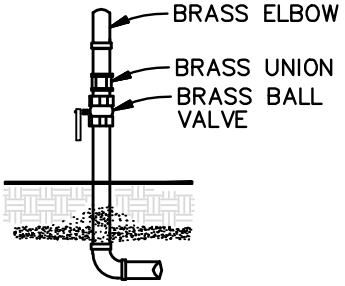

END

GENERAL NOTES:

1. BACKFLOW TO BE USED ON PRIVATE PROJECTS ONLY.
2. ABOVE GROUND FITTINGS AND PIPE TO BE BRASS. UNDER GROUND FITTINGS AND PIPE TO BE COPPER.

NOT TO SCALE

APPROVED BY:

P.W. DIRECTOR/CITY ENGINEER — DATE: 6/28/16

REVISIONS			
DATE	BY	MARK	APPROVED

TYPICAL BACKFLOW "PRIVATE"

CITY OF RIALTO, CALIFORNIA
PUBLIC WORKS DEPARTMENT
ENGINEERING DIVISION

STANDARD NO. IRR–504 | SHT 1 OF 1

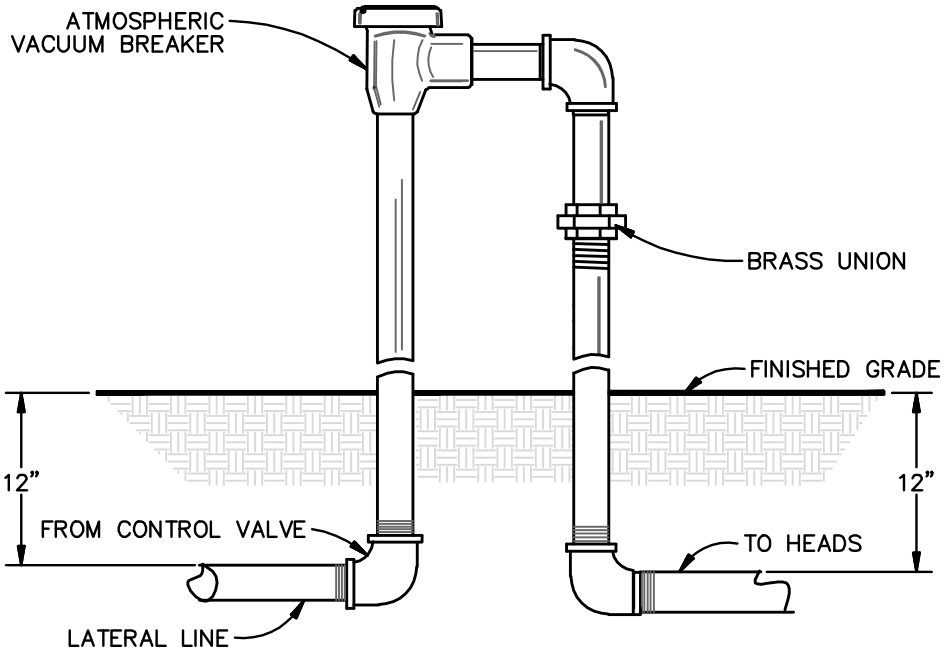

GENERAL NOTES:

1. INSTALL ATMOSPHERIC VACUUM BREAKER A MINIMUM 12" ABOVE HIGHEST HEAD.

NOT TO SCALE

APPROVED BY:

6/28/16

P.W. DIRECTOR/CITY ENGINEER DATE

REVISIONS			
DATE	BY	MARK	APPROVED

TYPICAL HOUSE CONNECTION ATMOSPHERIC VACUUM BREAKER

CITY OF RIALTO, CALIFORNIA
PUBLIC WORKS DEPARTMENT
ENGINEERING DIVISION

STANDARD NO. IRR-505 | SHT 1 OF 1

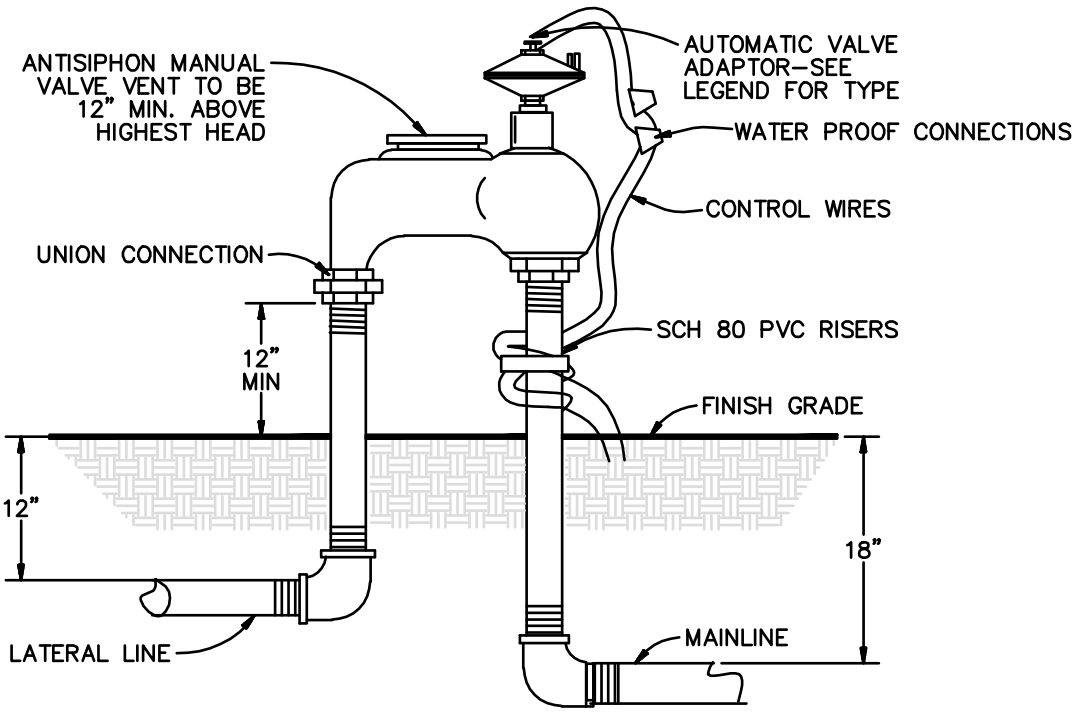

NOT TO SCALE

APPROVED BY:

6/28/16

P.W. DIRECTOR/CITY ENGINEER DATE

REVISIONS

DATE	BY	MARK	APPROVED

AUTOMATIC ANTI–SIPHON VALVE

CITY OF RIALTO, CALIFORNIA
PUBLIC WORKS DEPARTMENT
ENGINEERING DIVISION

STANDARD NO. IRR–506 | SHT 1 OF 1

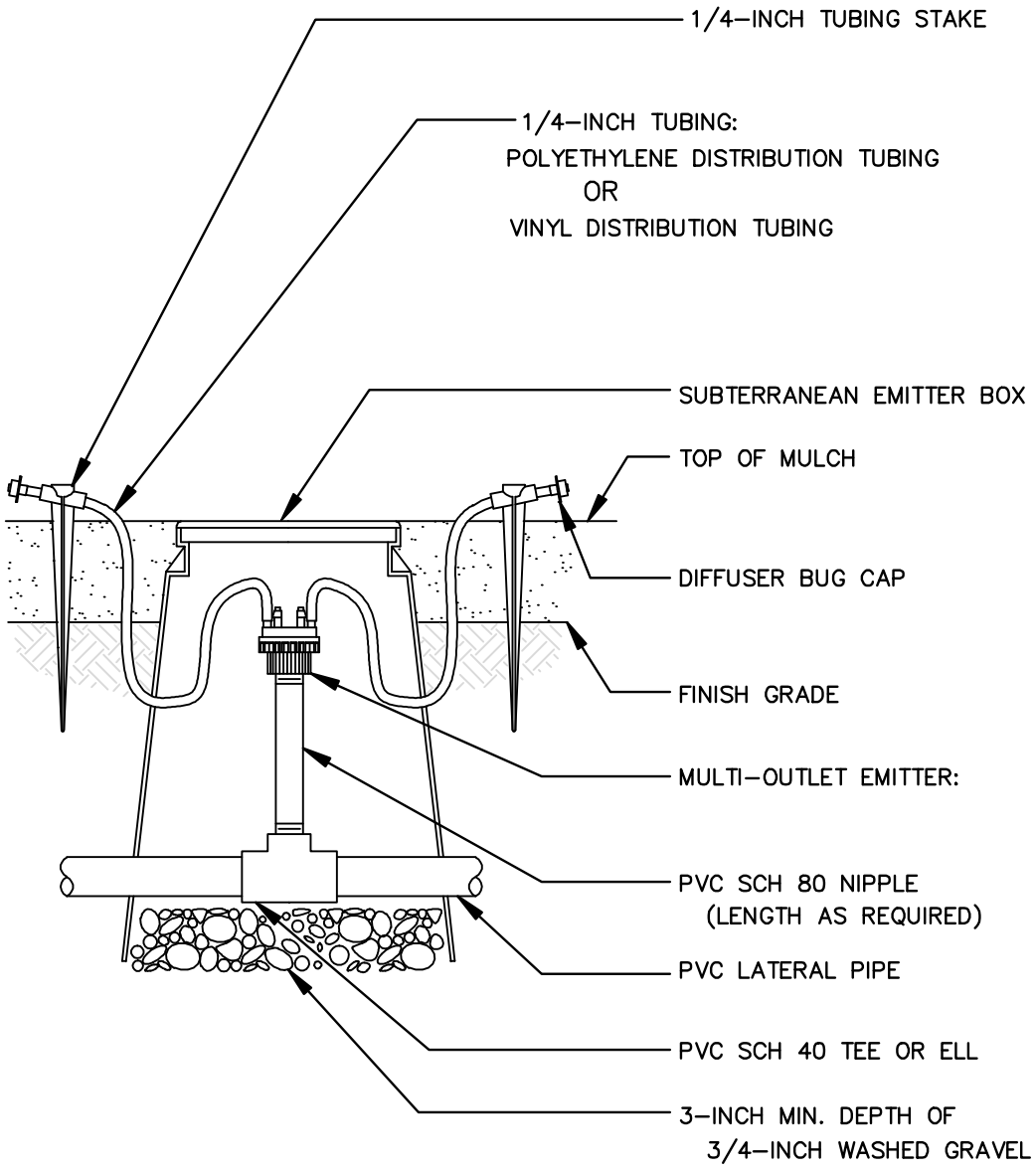

GENERAL NOTES:

1. TWO PORTS SHOULD BE LEFT UNUSED FOR FUTURE EXPANSION AVAILABLY.
2. COIL ADDITIONAL 9–INCHES OF TUBING IN VALVE BOX TO FACILITATE MAINTENANCE.

NOT TO SCALE

APPROVED BY:

6/28/16

P.W. DIRECTOR/CITY ENGINEER DATE

REVISIONS			
DATE	BY	MARK	APPROVED

MULTI–OUTLET EMITTER

CITY OF RIALTO, CALIFORNIA
PUBLIC WORKS DEPARTMENT
ENGINEERING DIVISION

STANDARD NO. IRR–507 | SHT 1 OF 2

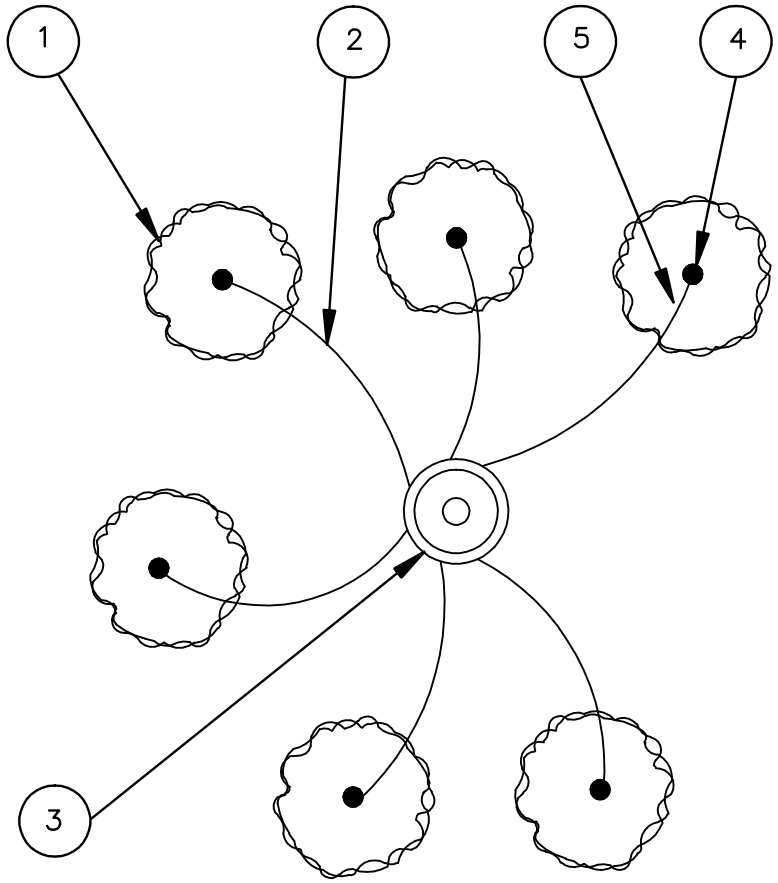

LEGEND:

1. PLANT MATERIAL (TYPICAL) SHRUB OR GROUND COVER
2. 1/4" DISTRIBUTION TUBING (MAXIMUM LENGTH PER MANUFACTURES SPECIFICATIONS)
3. MULTI-OUTLET EMITTER
4. DIFFUSER BUG CAP
5. 1/4" TUBING STAKE

GENERAL NOTES:

1. EMISSION DEVICE SHOULD BE PLACED AT EDGE OF ROOTBALL
2. DISTRIBUTION TUBING SHOULD BE BURIED 1" UNDER FINISH GRADE MINIMUM.

NOT TO SCALE

APPROVED BY:

6/28/16

P.W. DIRECTOR/CITY ENGINEER DATE

REVISIONS			
DATE	BY	MARK	APPROVED

MULTI-OUTLET EMITTER LAYOUT

CITY OF RIALTO, CALIFORNIA
PUBLIC WORKS DEPARTMENT
ENGINEERING DIVISION

STANDARD NO. IRR-507 | SHT 2 OF 2

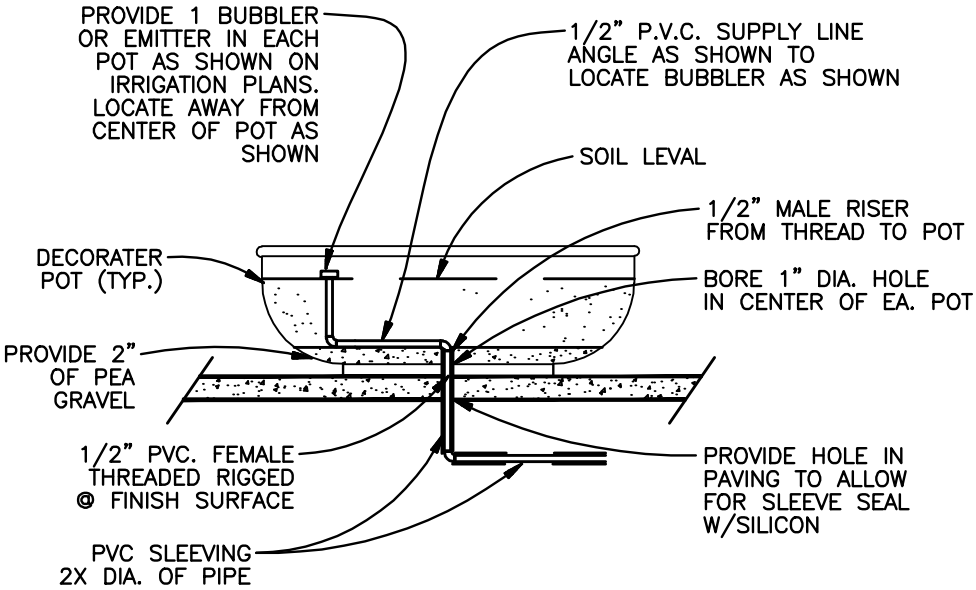

NOT TO SCALE

APPROVED BY:

6/28/16

P.W. DIRECTOR/CITY ENGINEER DATE

POT IRRIGATION

REVISIONS

DATE	BY	MARK	APPROVED

CITY OF RIALTO, CALIFORNIA
PUBLIC WORKS DEPARTMENT
ENGINEERING DIVISION

STANDARD NO. IRR-508 | SHT 1 OF 1

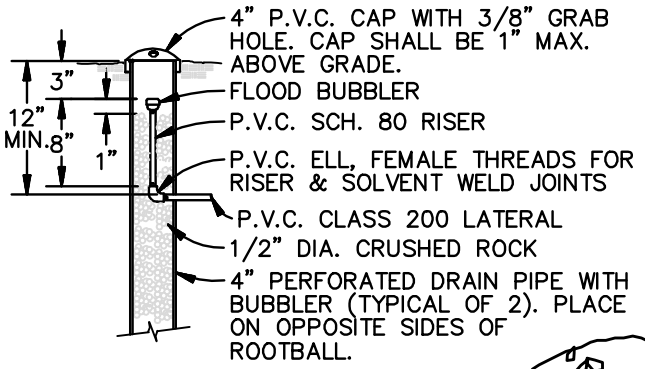

BUBBLER DETAIL

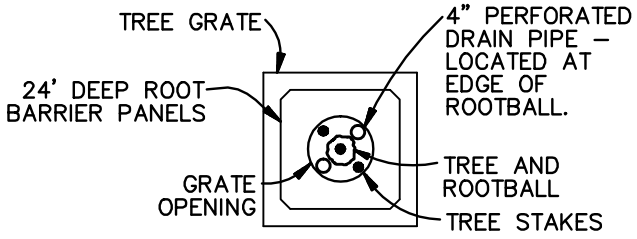

PLAN VIEW

TYING DETAIL

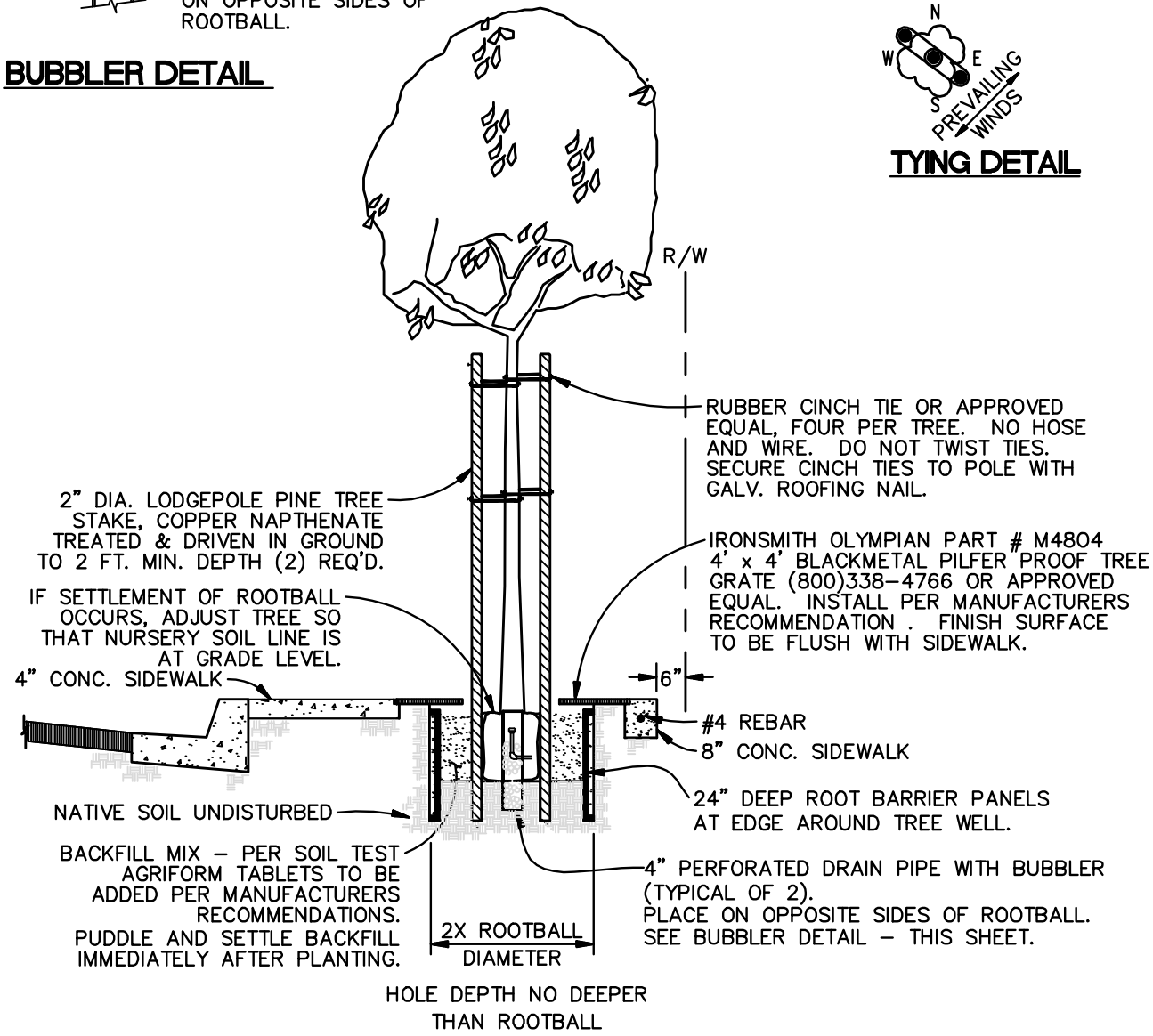

NOT TO SCALE

APPROVED BY:

6/28/16

P.W. DIRECTOR/CITY ENGINEER DATE

REVISIONS			
DATE	BY	MARK	APPROVED

TREE WELL BUBBLER INSTALLATION

CITY OF RIALTO, CALIFORNIA
PUBLIC WORKS DEPARTMENT
ENGINEERING DIVISION

STANDARD NO. IRR–509 | SHT 1 OF 1

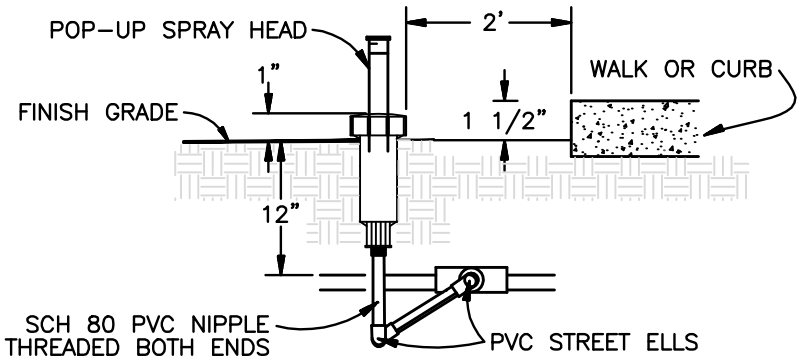

NOTES:

1. INSTALL POP–UP SPRAY HEAD 1" ABOVE FINISH GRADE.
2. FINISH GRADE TO BE 1 1/2" BELOW WALK OR CURB.
3. CHECK VALVE SHALL BE INSTALLED FOR LOW HEAD DRAINAGE IN SYSTEMS WITH A 4' OR MORE ELEVATION CHANGE BETWEEN HEADS.
4. NO SPRAY HEADS ARE TO BE INTALLED LESS THAN 24" AWAY FROM HARDSCAPE OR NON–PERMEABLE SURFACES.
5. STANDARD SPRAY IRRIGATION HEADS ARE PROHIBITED IN THE CITY OF RIALTO. HI–EFFICIENCY SPRAY HEADS SUCH AS ROTATORS ARE DISCOURAGED. HOWEVER, THEIR USE WILL BE REVIEWED BY THE CITY OF RIALTO ON A CASE BY CASE BASIS.

NOT TO SCALE

APPROVED BY:

6/28/16

P.W. DIRECTOR/CITY ENGINEER DATE

REVISIONS			
DATE	BY	MARK	APPROVED

LAWN/4", 6", 8"
POP–UP HEAD

CITY OF RIALTO, CALIFORNIA
PUBLIC WORKS DEPARTMENT
ENGINEERING DIVISION

STANDARD NO. IRR–510 | SHT 1 OF 1

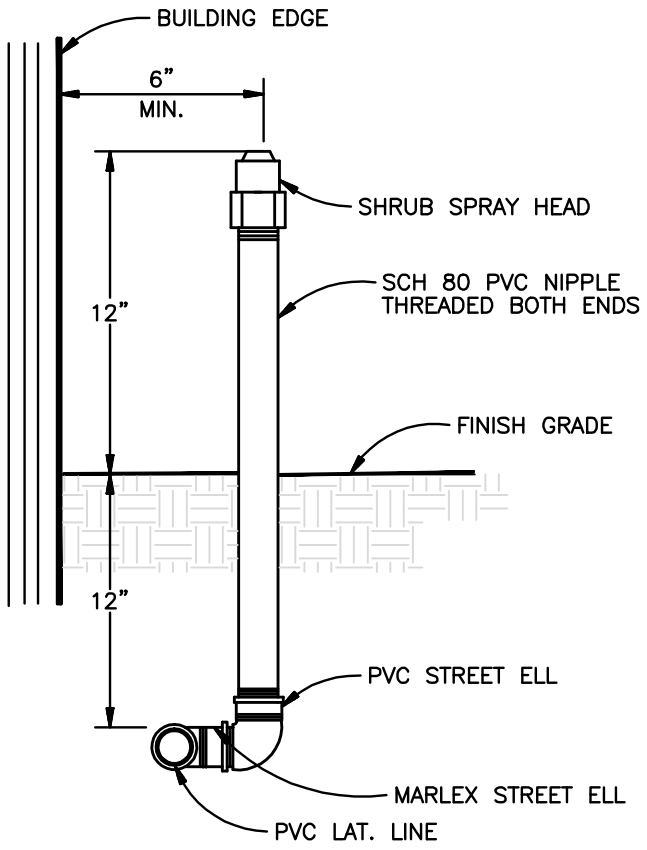

GENERAL NOTES:

1. FIXED RAISERS ALLOWED ONLY AGAINST BUILDINGS, WALLS, FENCES, ETC.
2. FIXED RAISERS ARE NOT PERMITTED IN LANDSCAPE MAINTENANCE DISTRICT AREAS, WITH IN PUBLIC RIGHT-OF-WAY OR ADJACENT TO PEDESTRIAN AREAS.
3. STANDARD SPRAY IRRIGATION HEADS ARE PROHIBITED IN THE CITY OF RIALTO. HI-EFFICIENCY SPRAY HEADS SUCH AS ROTATORS ARE DISCOURAGED. HOWEVER, THEIR USE WILL BE REVIEWED BY THE CITY OF RIALTO ON A CASE BY CASE BASIS.

NOT TO SCALE

APPROVED BY:

6/28/16

P.W. DIRECTOR/CITY ENGINEER DATE

REVISIONS			
DATE	BY	MARK	APPROVED

SHRUB SPRAY HEAD

CITY OF RIALTO, CALIFORNIA
PUBLIC WORKS DEPARTMENT
ENGINEERING DIVISION

STANDARD NO. IRR-511 | SHT 1 OF 1

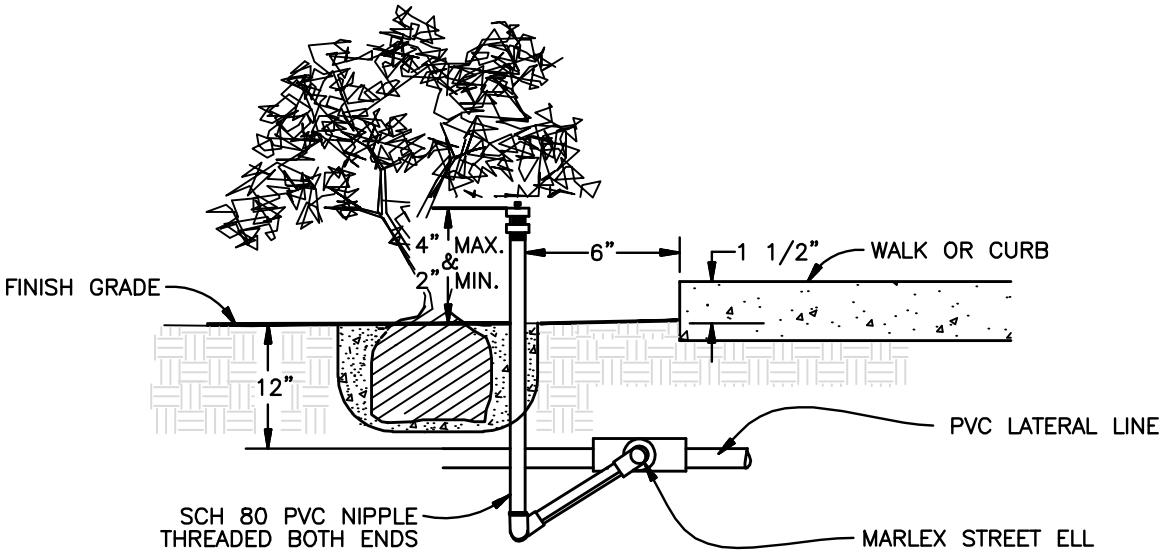

GENERAL NOTES:

1. ALL BUBBLERS TO BE INSTALLED WITH TRIPLE SWING JOINTS.
2. FINISH GRADE TO BE 1 1/2" BELOW WALK OR CURB.
3. BUBBLERS TO BE PLACED AT EDGE OF ROOT BALL.

NOT TO SCALE

APPROVED BY:

6/28/16

P.W. DIRECTOR/CITY ENGINEER DATE

REVISIONS

DATE	BY	MARK	APPROVED

BUBBLER HEAD

CITY OF RIALTO, CALIFORNIA
PUBLIC WORKS DEPARTMENT
ENGINEERING DIVISION

STANDARD NO. IRR-512 | SHT 1 OF 1

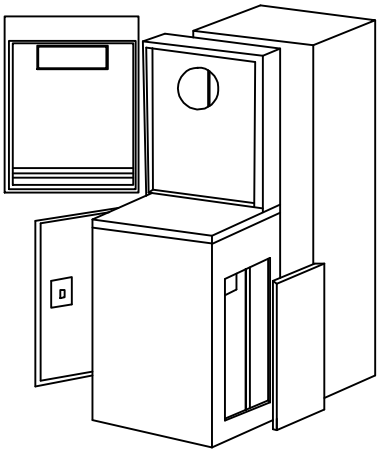

EXACT LOCATION OF CONTROLLER SHALL BE AGREED UPON BY EDISON, CITY LANDSCAPE INSPECTOR AND CONTRACTOR PRIOR TO ANY TRENCHING OR WIRE PLACEMENT

GENERAL NOTES:

PROVIDE 100A METER AND 50A/2P MAIN C/B WHERE INDICATED ON DRAWINGS

PROVIDE PANELBOARD WHERE INDICATED ON DRAWINGS.

PROVIDE IRRIGATION CONTROLLER CABINET WHERE INDICATED ON DRAWINGS.

TERMINATE AT EXISTION HANDHOLE. PER S.C.E. COMPANY REQ. VERIFY EXACT LOCATION AND TERMINATION REQ. WITH S.C.E. CO. PRIOR TO TRENCHING

CONDUIT AND CONDUCTOR SIZES ARE BASED ON NONMETALLEC CONDUIT AND COPPER CONDUCTORS WITH TYPE "THHN/THWN" INSULATION.

Model # MPS-A16-10K

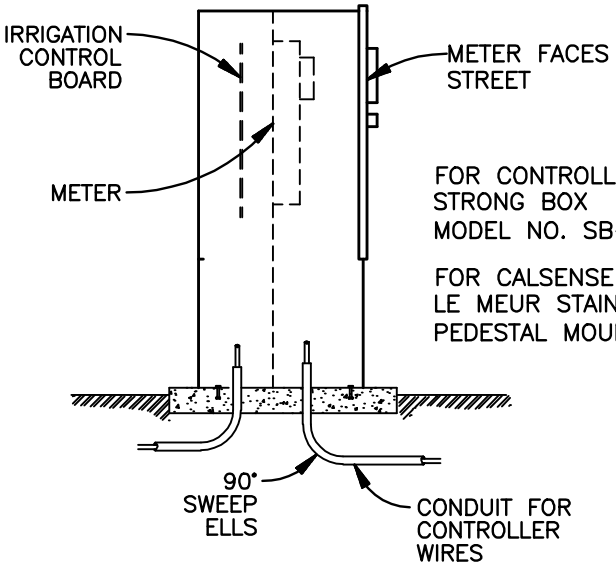

FOR CONTROLLERS USE:
STRONG BOX
MODEL NO. SB– 24SS/120V.

FOR CALSENSE CONTOLLERS USE:
LE MEUR STAINLESS STEEL
PEDESTAL MOUNT CABINET.

END VIEW

NOT TO SCALE

APPROVED BY:

6/28/16

P.W. DIRECTOR/CITY ENGINEER DATE

REVISIONS			
DATE	BY	MARK	APPROVED

IRRIGATION CONTROLLER

CITY OF RIALTO, CALIFORNIA
PUBLIC WORKS DEPARTMENT
ENGINEERING DIVISION

STD. NO. LMD–IRR–600 | SHT 1 OF 3

GENERAL NOTES:

1. ALL POWER WIRES, GROUND WIRES ETC. SHALL BE SEPARATELY SLEEVED AND SWEPT THROUGH ENCLOSED PAD WITH SCH 40 RIGID CONDUIT ALL SLEEVING SHALL BE A MINIMUM OF 18" BELOW FINISHED GRADE. ALL SLEEVING IS A GRAPHIC REPRESENTATION OF A TYP. INSTALLATION.

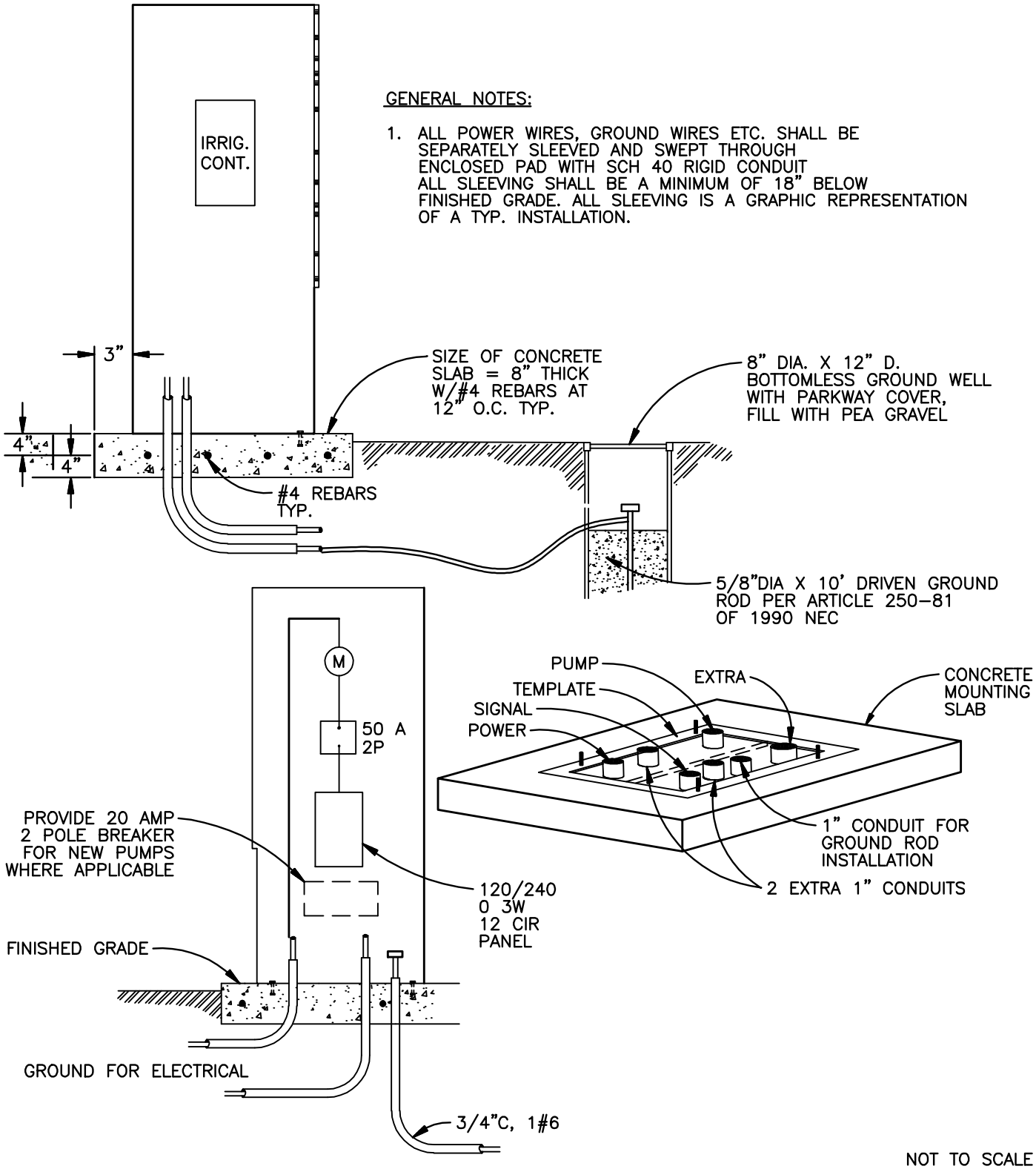

NOT TO SCALE

APPROVED BY:

6/28/16

P.W. DIRECTOR/CITY ENGINEER DATE

REVISIONS			
DATE	BY	MARK	APPROVED

IRRIGATION CONTROLLER

CITY OF RIALTO, CALIFORNIA
PUBLIC WORKS DEPARTMENT
ENGINEERING DIVISION

STD. NO. LMD-IRR-600 | SHT 2 OF 3

CITY OF RIALTO

IRRIGATION CONTROLLER STANDARD FOR LANDSCAPE MAINTENANCE DISTRICT #I AND #II

CALSENSE CONTROLLER INSTALLED IN AN APPROVED STAINLESS STEEL EDISON METER BOX/CONTROLLER ENCLOSURE. MODEL # SSER-MPS BASE-SSEPED-MPS-A1G101L.

CONTACT CALSENSE WITH THE FOLLOWING NUMBERS FOR THE CITY OF RIALTO METER/CONTROLLER.

CITY OF RIALTO
PART # FOR A 36 STATION CONTROLLER.
ET 2000 E WITH ADD COMMUNICATION.

CITY OF RIALTO
PART # FOR A 48 STATION CONTROLLER.

CONTACTS:

CALSENSE
BOB MOXLEY
PHONE #: (800) 572-8608, OFFICE
(760) 580-9428, CELL
(760) 438-2619, FAX
EMAIL: BOBM@CALSENSE.COM

NOTE: THE REFERENCE AND/OR CALL OUT ON THIS STANDARD TO SPECIFIC MANUFACTURER SHALL BE INTERPRETED AS "OR APPROVED EQUIVALENT". THE CITY ENGINEER'S APPROVAL IS REQUIRED AS TO WHETHER OR NOT A PRODUCT MEETS THE CITY'S STANDARD TO BE AN APPROVED EQUIVALENT.

NOT TO SCALE

APPROVED BY:

6/28/16

P.W. DIRECTOR/CITY ENGINEER DATE

REVISIONS

DATE	BY	MARK	APPROVED

IRRIGATION CONTROLLER

CITY OF RIALTO, CALIFORNIA
PUBLIC WORKS DEPARTMENT
ENGINEERING DIVISION

STD. NO. LMD-IRR-600 | SHT 3 OF 3

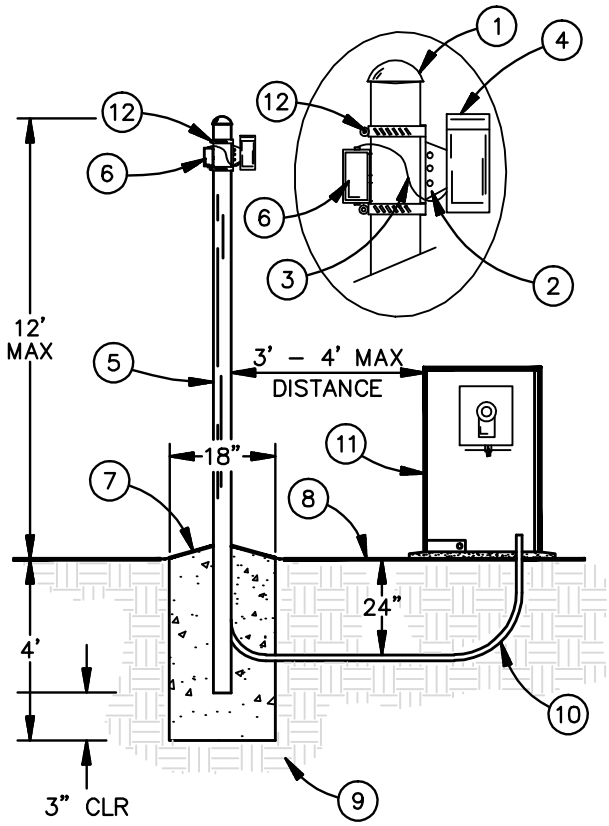

GENERAL NOTES:

1. ACID WASH STEEL PIPE POST, STEEL POST CAP AND ELECTRICAL "J" BOX THOROUGHLY. PAINT WITH 1 COAT RUSTOLEUM PRIMER AND 2 COATS OF FOREST GREEN EXTERIOR HIGH GLOSS PAINT.

NOTES:

1. 4" DIAMETER STEEL POST CAP SECURE TO PIPE.
2. TIPPING BUCKET BRACKET
3. 1/2" DIA. FLEXIBLE ALL WEATHER ELECTRICAL CONDUIT, CONNECT BOX TO BOX.
4. TIPPING BUCKET RAIN GAUGE, INSTALL PER MANUFACTURERS RECOMMENDATIONS.
5. 4" DIA GALVANIZED STEEL PIPE POST.
6. WEATHER PROOF ELECTRICAL "J" BOX DRILL 1" DIA HOLE THROUGH PIPE AND MOUNT BOX TO PIPE.
7. SLOPE TOP OF FOOTING AWAY FROM PIPE.
8. FINISH SURFACE.
9. NATURAL COMPACTED SOIL.
10. 1" DIA ELECTRICAL PVC RIDGED CONDUIT FROM PIPE TO CONTROLLER.
11. PROPOSED CONTROLLER ENCLOSURE.
12. STAINLESS STEEL HOSE CLAMPS (2)EACH.

NOT TO SCALE

APPROVED BY:

6/28/16

P.W. DIRECTOR/CITY ENGINEER DATE

REVISIONS

DATE	BY	MARK	APPROVED

TIPPING BUCKET

CITY OF RIALTO, CALIFORNIA
PUBLIC WORKS DEPARTMENT
ENGINEERING DIVISION

STD. NO. LMD–IRR–601 | SHT 1 OF 1

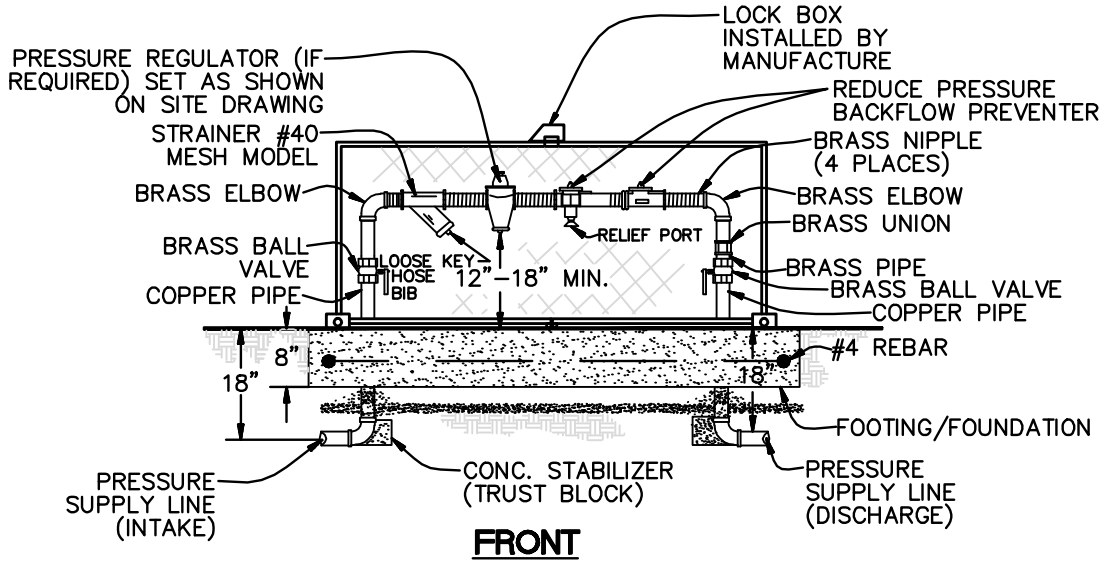

FRONT

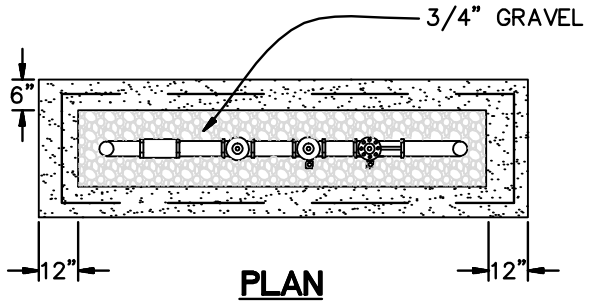

PLAN

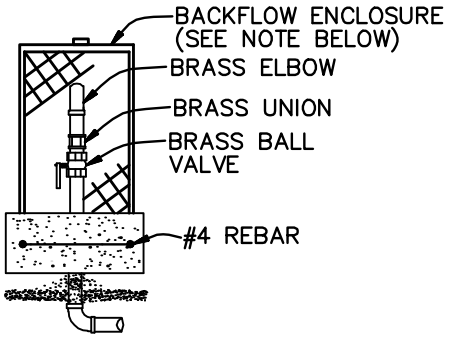

END

GENERAL NOTES:

1. CONTRACTOR SHALL FORM ENCLOSURE AND REQUEST INSPECTION PRIOR TO POURING FOOTING/FOUNDATION.
2. CONTRACTOR SHALL USE 520–C–2500 CONCRETE.
3. BACKFLOW ENCLOSURE, LE MEUR/STRONG BOX OR EQUAL 24"X60"X36" HIGH HINGED AT BOTH ENDS SECURE TO 6"X8" FOOTING W/4" J BOLTS (EQUIPMENT TO BE CENTERED INSIDE HOUSING).
4. ABOVE GROUND FITTINGS AND PIPE TO BE BRASS. UNDER GROUND FITTINGS AND PIPE TO BE COPPER.

NOT TO SCALE

APPROVED BY:

P.W. DIRECTOR/CITY ENGINEER — DATE 6/28/16

REVISIONS			
DATE	BY	MARK	APPROVED

TYPICAL BACKFLOW

CITY OF RIALTO, CALIFORNIA
PUBLIC WORKS DEPARTMENT
ENGINEERING DIVISION

STD NO. LMD–IRR–602 | SHT 1 OF 1

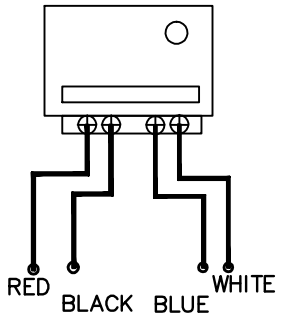

IRRIGATION CONTROLLER

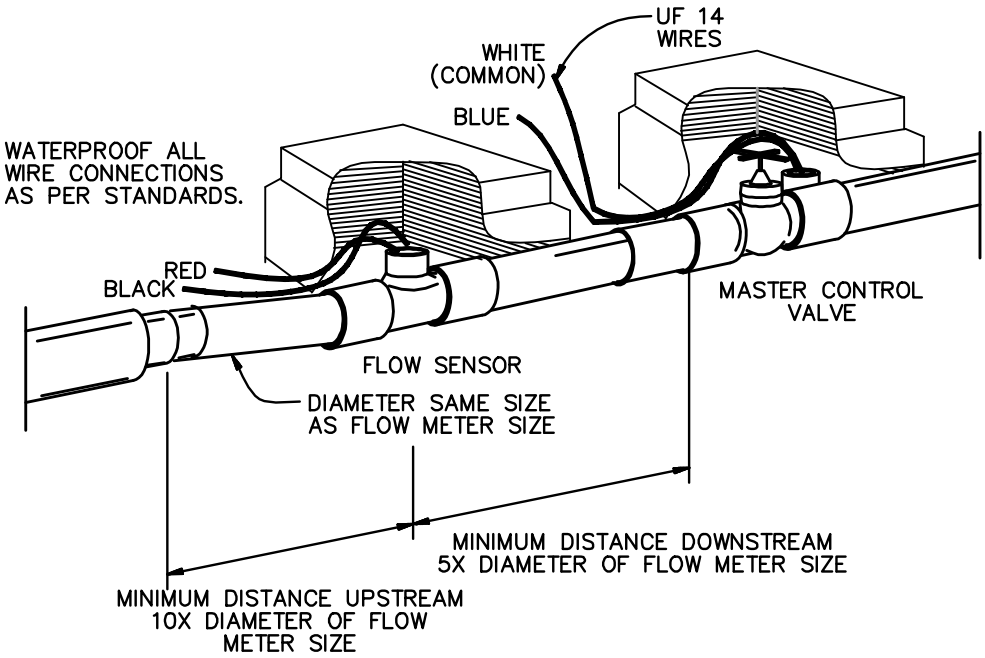

NOT TO SCALE

APPROVED BY:

6/28/16

P.W. DIRECTOR/CITY ENGINEER DATE

REVISIONS			
DATE	BY	MARK	APPROVED

FLOW METER/ MASTER VALVE

CITY OF RIALTO, CALIFORNIA
PUBLIC WORKS DEPARTMENT
ENGINEERING DIVISION

STD. NO. LMD-IRR-603 | SHT 1 OF 1

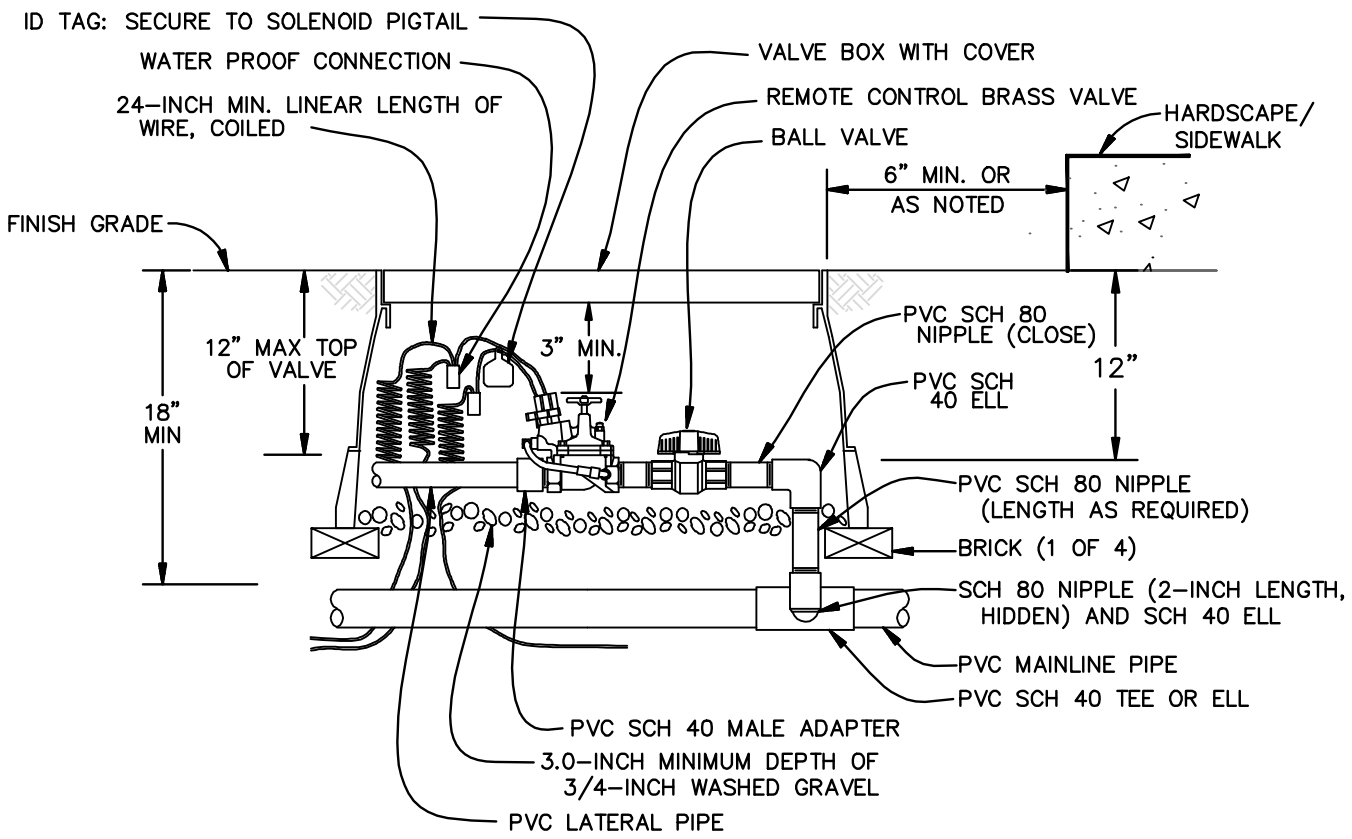

GENERAL NOTES:

1. VALVES ARE TO BE INSTALLED IN SHRUB AREAS UNLESS OTHERWISE NOTED.
2. WHEN MORE THAN ONE VALVE IS LOCATED IN THE SAME AREA. PROVIDE A SPACE A MIN. OF 3 FT. APART.
3. USE TEFLON TAPE ON ALL THREADED FITTINGS.
4. ONE VALVE PER VALVE BOX. VALVE NUMBER TO BE ETCHED/BRANDED IN LID.
5. ALL COMMON WIRES ARE TO BE #12 AWG, TYPE V.F., 600 VOLT.
6. EXTRA WIRE TO BE RUN FROM CONTROLLER TO VALVE BOX WITH A 24" LOOP AT EACH VALVE BOX. EXTRA WIRE TO BE DIFFERENT COLOR FROM COMMON WIRE.

NOT TO SCALE

APPROVED BY:

6/28/16

P.W. DIRECTOR/CITY ENGINEER DATE

REVISIONS

DATE	BY	MARK	APPROVED

REMOTE CONTROL VALVE–BRASS

CITY OF RIALTO, CALIFORNIA
PUBLIC WORKS DEPARTMENT
ENGINEERING DIVISION

STD. NO. LMD–IRR–604 | SHT 1 OF 1

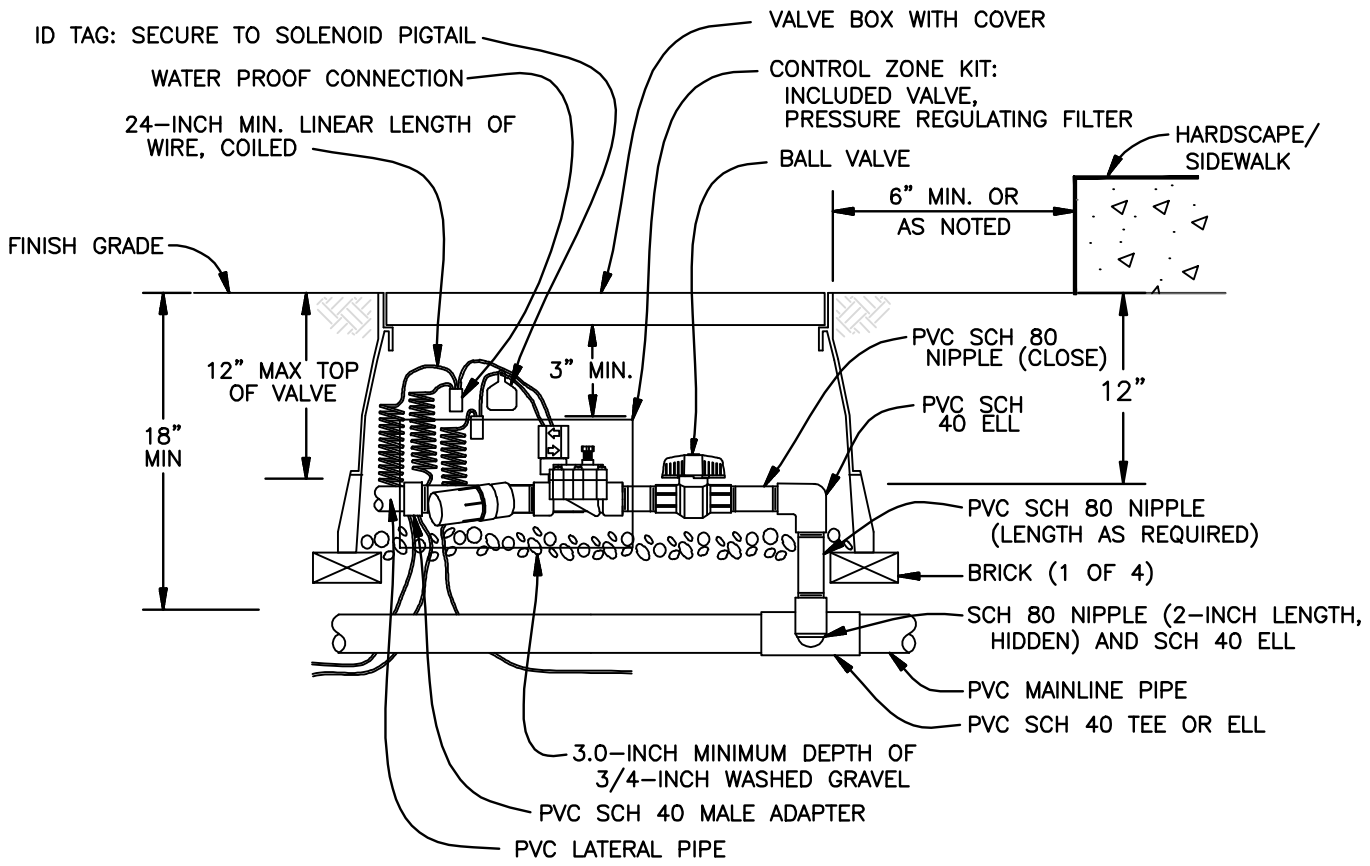

GENERAL NOTES:

1. CLEAN OR REPLACE INLINE WYE FILTERS AS NECESSARY TO KEEP PROPER FILTRATION AND FLOW. DO NOT RUN SYSTEM WITHOUT FILTRATION.
2. VALVES ARE TO BE INSTALLED IN SHRUB AREAS UNLESS OTHERWISE NOTED.
3. WHEN MORE THAN ONE VALVE IS LOCATED IN THE SAME AREA. PROVIDE A SPACE A MIN. OF 3 FT. APART.
4. USE TEFLON TAPE ON ALL THREADED FITTINGS.
5. ONE VALVE PER VALVE BOX. VALVE NUMBER TO BE ETCHED/BRANDED IN LID. USE JUMBO VALVE BOX FOR DRIP VALVES. IF VALVE ASSEMBLY WITH BALL VALVE WILL NOT FIT IN ONE VALVE BOX USE A SECOND VALVE BOX FOR BALL VALVE.
6. ALL COMMON WIRES ARE TO BE #12 AWG, TYPE V.F., 600 VOLT.
7. EXTRA WIRE TO BE RUN FROM CONTROLLER TO VALVE BOX WITH A 24" LOOP AT EACH VALVE BOX. EXTRA WIRE TO BE DIFFERENT COLOR FROM COMMON WIRE.

NOT TO SCALE

APPROVED BY:

6/28/16

P.W. DIRECTOR/CITY ENGINEER DATE

REVISIONS			
DATE	BY	MARK	APPROVED

DRIP CONTROL ZONE KIT

CITY OF RIALTO, CALIFORNIA
PUBLIC WORKS DEPARTMENT
ENGINEERING DIVISION

STD. NO. LMD-IRR-605 | SHT 1 OF 1

STEP 1

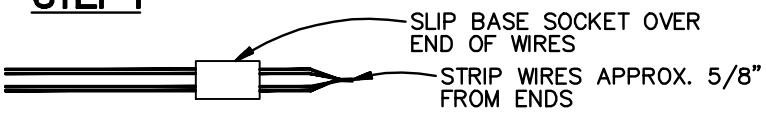

STEP 2

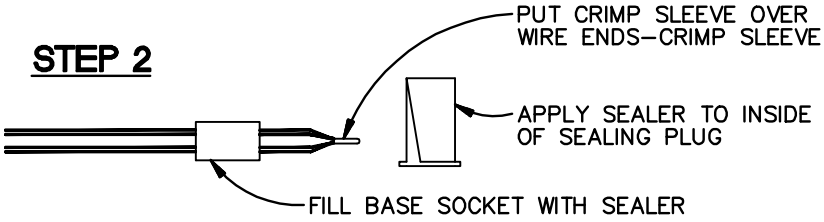

STEP 3

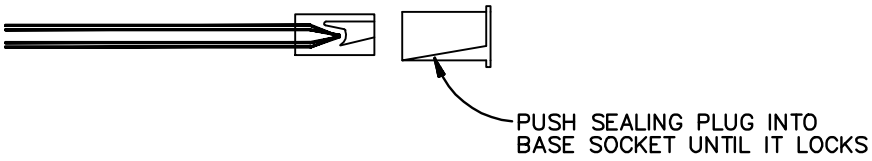

STEP 4

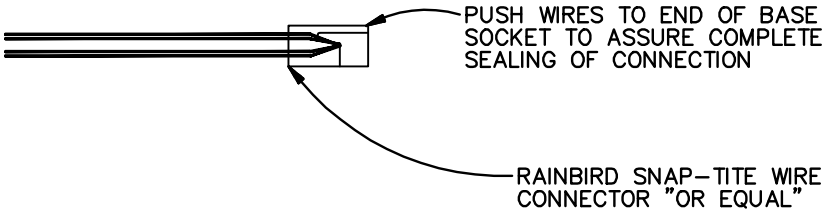

NOT TO SCALE

APPROVED BY:

6/28/16

P.W. DIRECTOR/CITY ENGINEER DATE

WIRE CONNECTOR

REVISIONS

DATE	BY	MARK	APPROVED

CITY OF RIALTO, CALIFORNIA
PUBLIC WORKS DEPARTMENT
ENGINEERING DIVISION

STD. NO. LMD–IRR–606 | SHT 1 OF 1

STEP 1

STEP 2

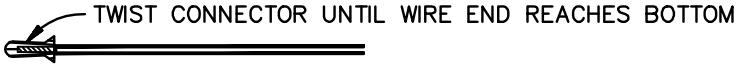

STEP 3

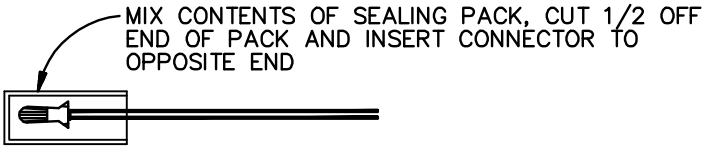

STEP 4

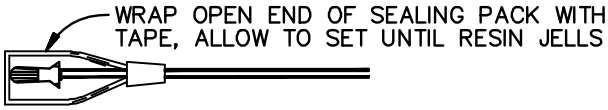

"SCOTCH" SEALING PACK

NOT TO SCALE

APPROVED BY:

6/28/16

P.W. DIRECTOR/CITY ENGINEER DATE

"SCOTCH" SEALING PACK

REVISIONS

DATE	BY	MARK	APPROVED

CITY OF RIALTO, CALIFORNIA
PUBLIC WORKS DEPARTMENT
ENGINEERING DIVISION

STD. NO. LMD-IRR-607 | SHT 1 OF 1

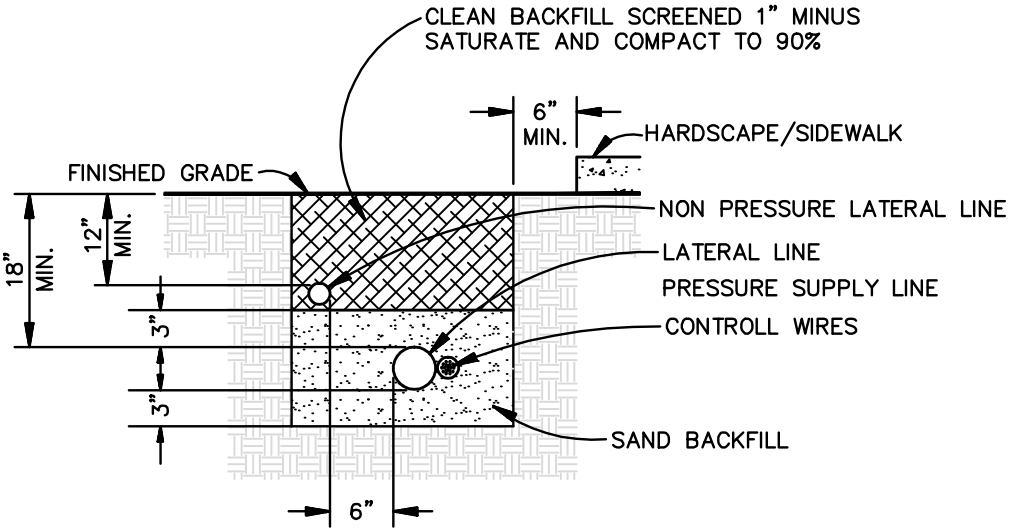

GENERAL NOTES:

1. MINUMUM OF 3" OF SAND WILL BE PLACED UNDER, AROUND AND ABOVE ALL LATERAL PRESSURE SUPPLY LINES. THE REMAINDER OF TRENCH CAN BE FILL WITH NATIVE SOIL SCREENED 1" MINUS.
2. ALL BACK FILL IS TO BE SATURATED AND COMPACTED TO 90%
3. INSTALL ALL PVC PIPE WITH LABEL UP.
4. SNAKE ALL PIPE IN TRENCH.
5. BUNDLE AND TAPE ALL CONTROL WIRES AT 10' O.C. TO PRESSURE SUPPLY LINE AND PROVIDE A SERVICE LOOP AT ALL 90 DEGREE CHANGES IN DIRECTION.
6. PRESSURE MAIN 2" AND LARGER SHALL BE P.V.C. CLASS 315 SMALLER THAN 2" SHALL BE P.V.C. SCHEDULE 40.
7. CONTRACTOR SHALL PROVIDE SLEEVES OR CONDUIT LINES WHEN MAINLINE INSTALLATION IS UNDER ASPHALT OR CONCRETE. SIZE TO BE 2 1/2 X DIAMETER OF PRESSURE SUPPLY LINE.
8. CONTRACTOR SHALL PROVIDE 24" INCHES OF COVER OVER PIPE SERVING A DRINKING FOUNTAIN OR PRESSURE MAINLINE 3" AND LARGER.

NOT TO SCALE

APPROVED BY:

6/28/16

P.W. DIRECTOR/CITY ENGINEER DATE

REVISIONS			
DATE	BY	MARK	APPROVED

TRENCHING DETAIL

CITY OF RIALTO, CALIFORNIA
PUBLIC WORKS DEPARTMENT
ENGINEERING DIVISION

STD. NO. LMD-IRR-608 | SHT 1 OF 1

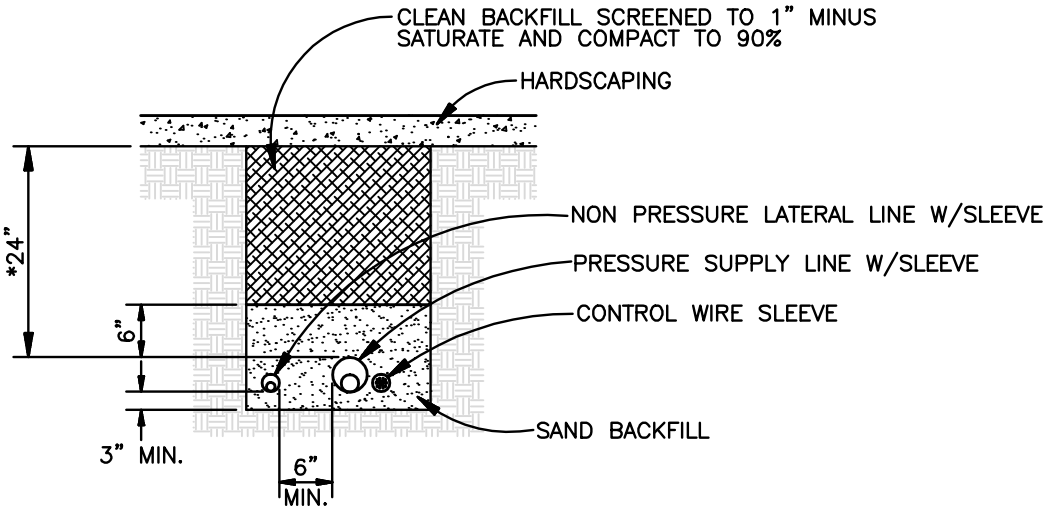

GENERAL NOTES:

1. SAND WILL BE PLACED A MINIMUM OF 3" BELOW ALL LINES AND A MINIMUM OF 6" FROM THE TOP OF ALL LINES. THE REMAINDER OF TRENCH CAN BE FILLED WITH NATIVE SOIL SCREENED 1" MINUS.
2. INSTALL CONTROL WIRE SLEEVE ADJACENT TO THE PRESSURE SUPPLY LINE, SIZE PER SPEC.
3. ALL SLEEVES TO BE SCHEDULE 40 PVC AND TO BE 2 1/2 X THE DIAMETER OF THE LINE TO BE SLEEVED.
4. * INCREASE THIS DISTANCE TO 36" WHEN SLEEVING UNDER ROADWAYS AND COMMERCIAL TRAFFIC WAYS WHEN INSTRUCTED BY INSPECTOR.
5. SLEEVES SHALL BE EXTENDED BEYOND HARDSCAPE A MINIMUM OF 18" OR TO POINTS AS REQUESTED BY INSPECTOR
6. IF SLEEVES ARE TO BE USED AT A LATER DATE, CONTRACTOR SHALL TAPE ENDS AND PROVIDE A VERTICAL MARK AT ENDS OF SLEEVING VISIBLE AT GROUND LEVEL.
7. ALL BACKFILL IS TO BE SATURATED AND COMPACTED TO 90%.

NOT TO SCALE

APPROVED BY:

6/28/16

P.W. DIRECTOR/CITY ENGINEER DATE

REVISIONS

DATE	BY	MARK	APPROVED

SLEEVING DETAIL

CITY OF RIALTO, CALIFORNIA
PUBLIC WORKS DEPARTMENT
ENGINEERING DIVISION

STD. NO. LMD-IRR-609 | SHT 1 OF 1

MAIN SUPPLY, LATERAL
AND WIRING

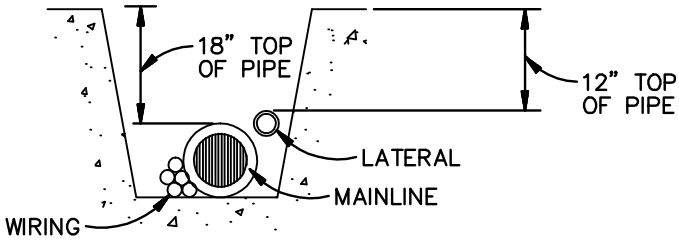

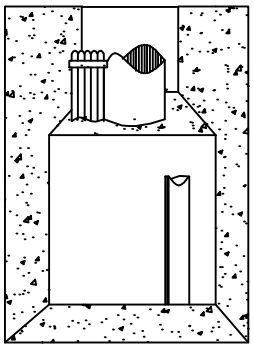

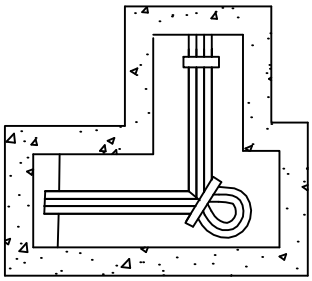

PROVIDE A 20" LOOP OF WIRE
IN ALL CHANGES OF DIRECTION
GREATER THAN 30 DEGREES
REMOVE TIES AFTER ALL
CONNECTIONS HAVE BEEN MADE

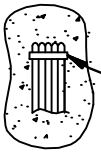

TAPE AND BUNDLE
WIRING AT 10' O.C.
MAXIMUM TO MAINLAINE.

PLAN VIEW

GENERAL NOTES:

1. DO NOT INSTALL 120 VOLTAGE OR HIGHER WIRE IN THE SAME TRENCH AS THE IRRIGATION CONTROL WIRING.

NOT TO SCALE

APPROVED BY:

6/28/16

P.W. DIRECTOR/CITY ENGINEER DATE

REVISIONS			
DATE	BY	MARK	APPROVED

PIPING AND WIRING

CITY OF RIALTO, CALIFORNIA
PUBLIC WORKS DEPARTMENT
ENGINEERING DIVISION

STD. NO. LMD-IRR-610 | SHT 1 OF 1

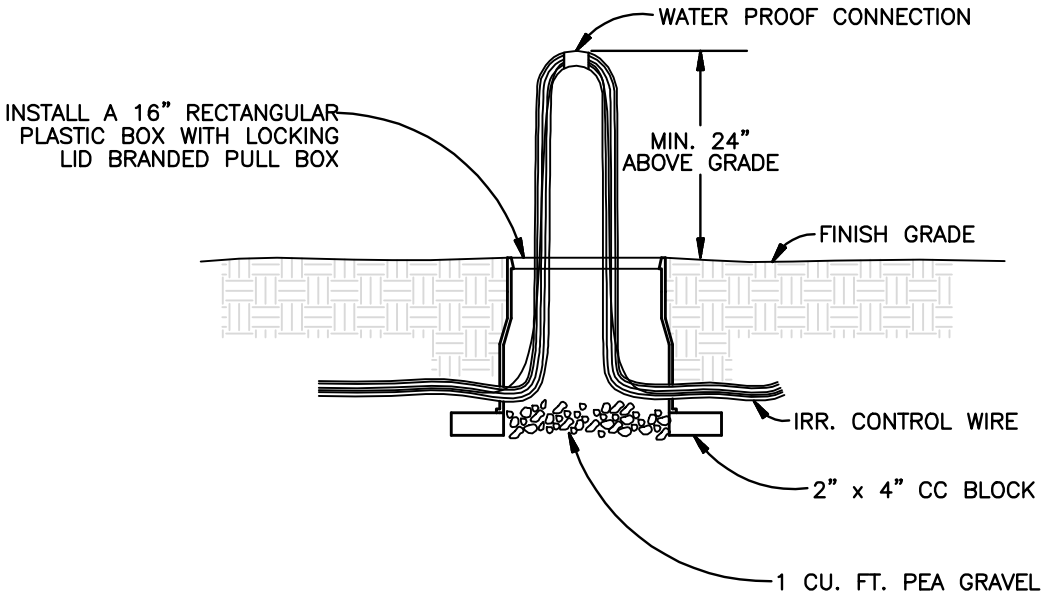

GENERAL NOTES:

1. VALVE BOX MAY BE USED IN LIEU OF SPLICE BOX.
2. WIRE LOOP SHALL EXTEND A MINIMUM OF 24" ABOVE GRADE WHEN PULLED OUT. WIRE TO BE LOOSELY COILED WITHIN VALVE BOX OR SPLICE BOX.

NOT TO SCALE

APPROVED BY:

6/28/16

P.W. DIRECTOR/CITY ENGINEER DATE

REVISIONS			
DATE	BY	MARK	APPROVED

SPLICE BOX ASSEMBLY

CITY OF RIALTO, CALIFORNIA
PUBLIC WORKS DEPARTMENT
ENGINEERING DIVISION

STD. NO. LMD-IRR-611 | SHT 1 OF 1

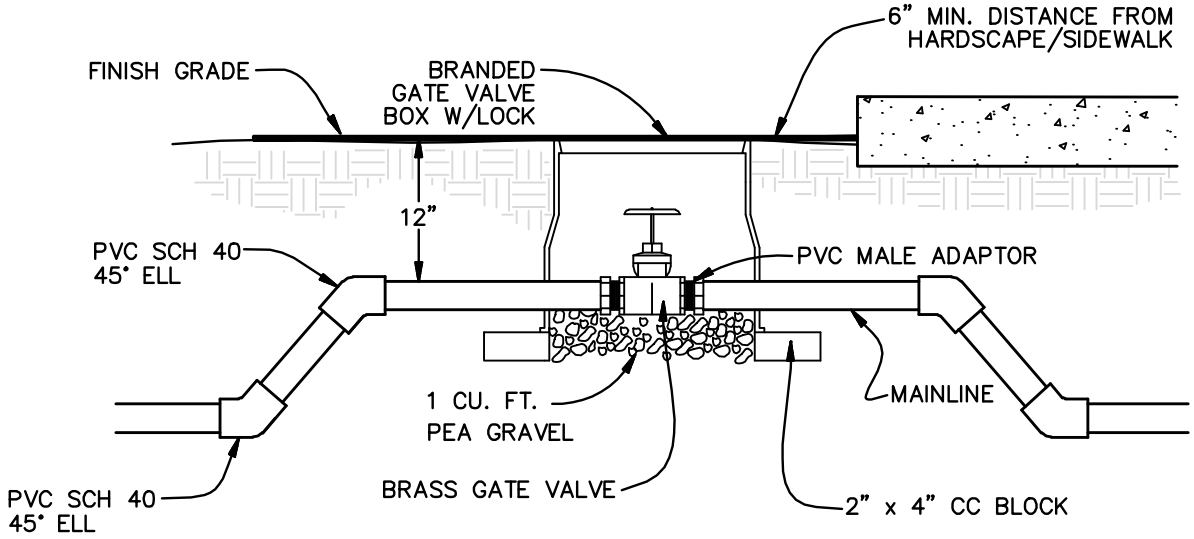

2" AND SMALLER GATE VALVE

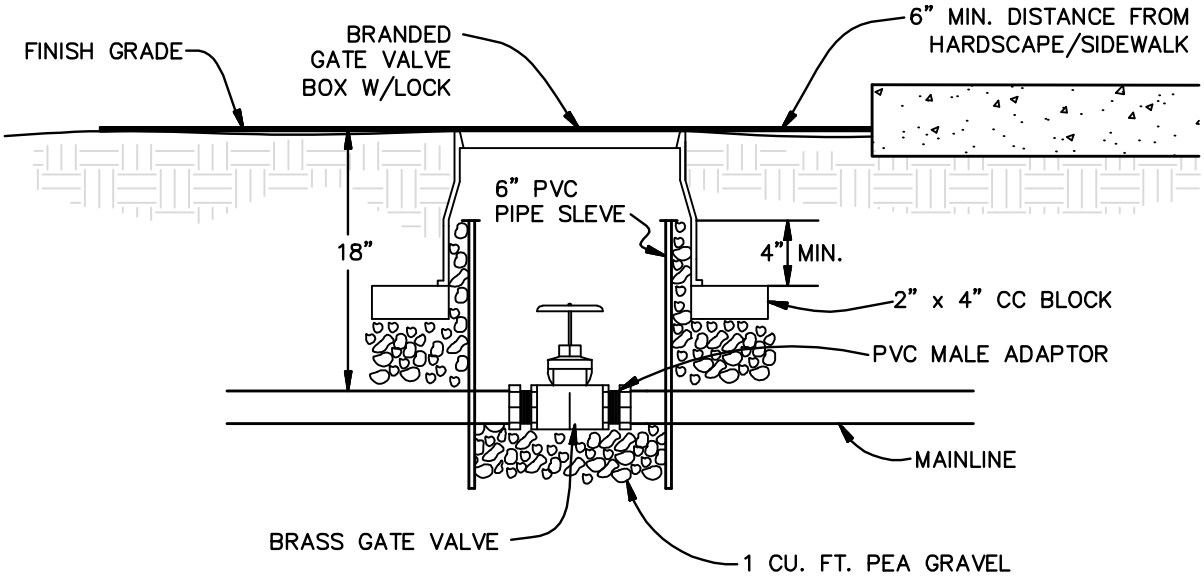

OVER 2" GATE VALVE

GENERAL NOTES:

1. GATE VALVES 2" OR SMALLER IN SIZE SHALL BE RAISED TO BE LOCATED WITHIN 12" OF FINISH GRADE.
2. GATE VALVES SHALL BE INSTALLED IN A 10" MIN. DIAMETER ROUND VALVE BOX. LID SHALL BE ETCHED/BRANDED WITH THE INITIALS 'GV' FOR IDENTIFICATION PURPOSES.

NOT TO SCALE

APPROVED BY:

6/28/16

P.W. DIRECTOR/CITY ENGINEER DATE

REVISIONS			
DATE	BY	MARK	APPROVED

GATE VALVE

CITY OF RIALTO, CALIFORNIA
PUBLIC WORKS DEPARTMENT
ENGINEERING DIVISION

STD. NO. LMD-IRR-612 | SHT 1 OF 1

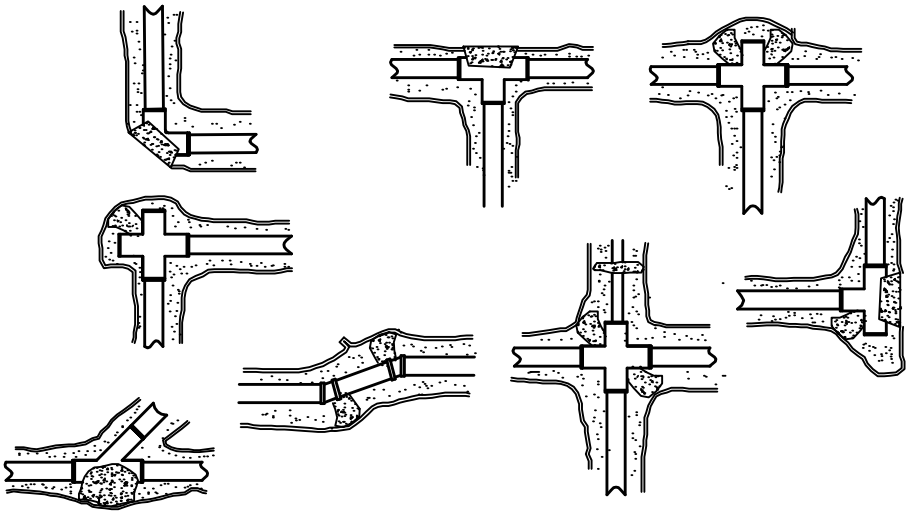

TYPICAL CONCRETE TO REST AGAINST UNDISTURBED SOIL.

PLAN VIEW

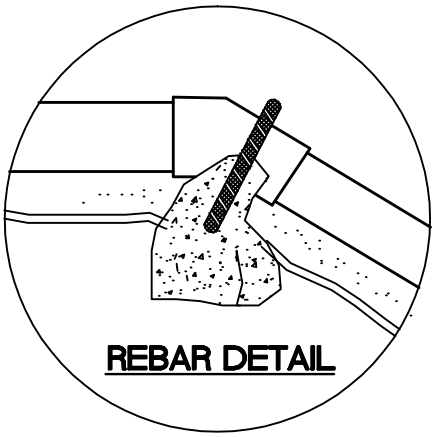

REBAR DETAIL

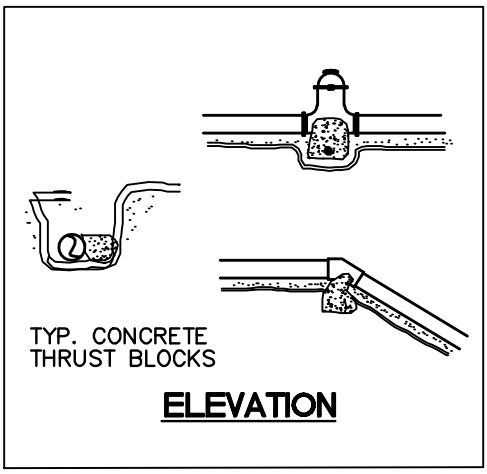

ELEVATION

GENERAL NOTES:

1. THRUST BLOCKS SHALL BE INSTALLED IN ACCORDANCE WITH PIPE MANUFACTURER'S RECOMMENDATION FOR SIZE OF PIPING REQUIRED.
2. UTILIZED IN ALL (2 1/2" AND LARGER MAINLINE PIPE)
3. #3 REBAR TO BE PLACED AROUND PIPE INTO THRUST BLOCK TYP.

NOT TO SCALE

APPROVED BY:

6/28/16

P.W. DIRECTOR/CITY ENGINEER DATE

REVISIONS			
DATE	BY	MARK	APPROVED

THRUST BLOCK ASSEMBLY

CITY OF RIALTO, CALIFORNIA
PUBLIC WORKS DEPARTMENT
ENGINEERING DIVISION

STD. NO. LMD-IRR-613 | SHT 1 OF 1

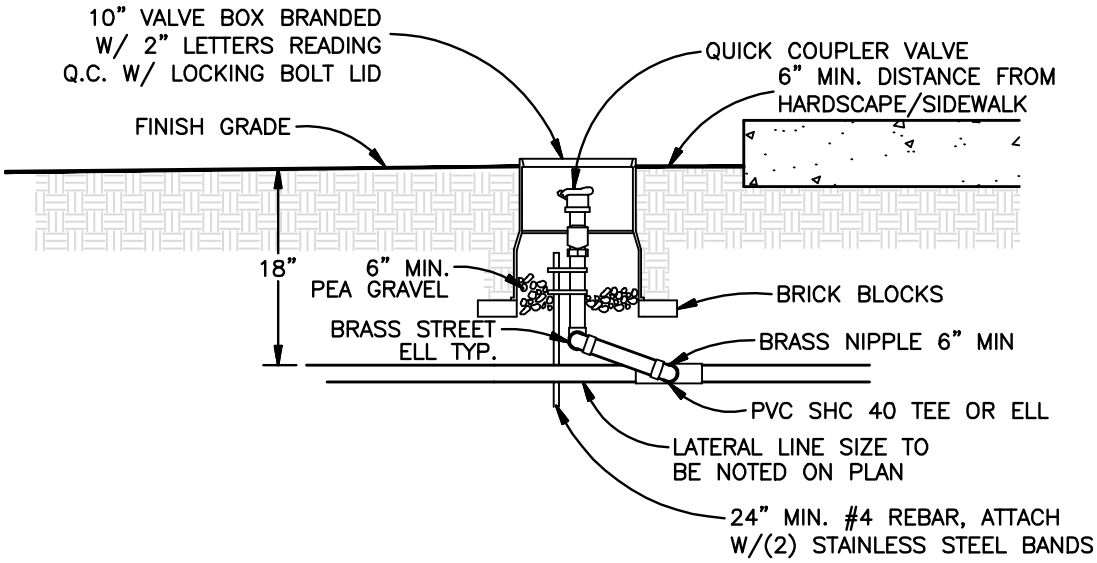

GENERAL NOTES:

1. USE TEFLON TAPE ON ALL THREADED FITTINGS.
2. QUICK COUPLER SHALL BE INSTALLED IN A 10" MIN. DIAMETER ROUND VALVE BOX. LID SHALL BE ETCHED/BRANDED WITH THE INITIALS 'QC' FOR IDENTIFICATION PURPOSES.

NOT TO SCALE

APPROVED BY:

6/28/16

P.W. DIRECTOR/CITY ENGINEER DATE

REVISIONS

DATE	BY	MARK	APPROVED

QUICK COUPLER

CITY OF RIALTO, CALIFORNIA
PUBLIC WORKS DEPARTMENT
ENGINEERING DIVISION

STD. NO. LMD-IRR-614 | SHT 1 OF 1

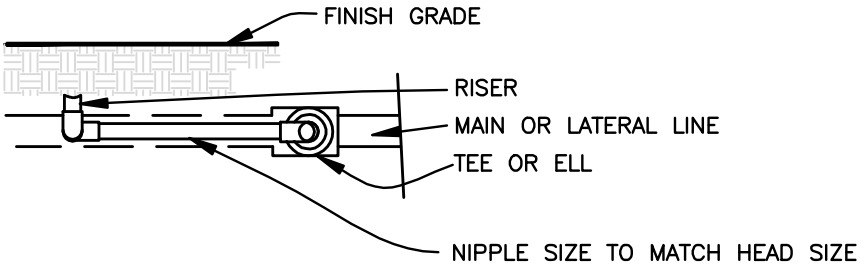

ELEVATION

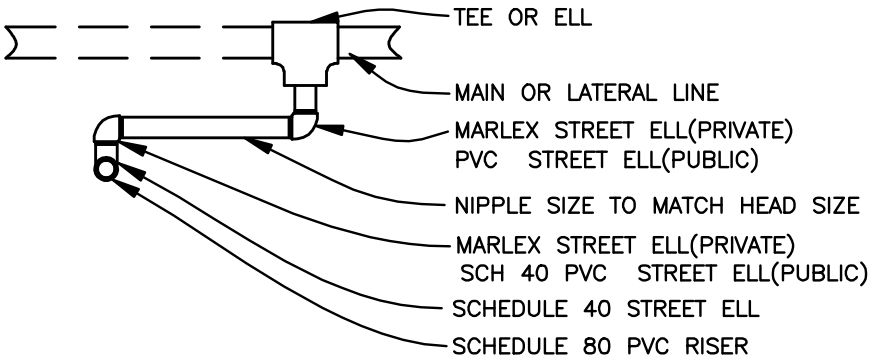

PLAN

GENERAL NOTES:

1. ALL PIPE AND FITTINGS SHALL BE SCHEDULE 40 PVC UNLESS OTHERWISE SPECIFIED
2. USE PVC STREET ELLS W/TEFLON TAPE FOR ALL PUBLIC JOBS

NOT TO SCALE

APPROVED BY:

6/28/16

P.W. DIRECTOR/CITY ENGINEER DATE

REVISIONS			
DATE	BY	MARK	APPROVED

TRIPLE SWING JOINT

CITY OF RIALTO, CALIFORNIA
PUBLIC WORKS DEPARTMENT
ENGINEERING DIVISION

STD. NO. LMD-IRR-615 | SHT 1 OF 1

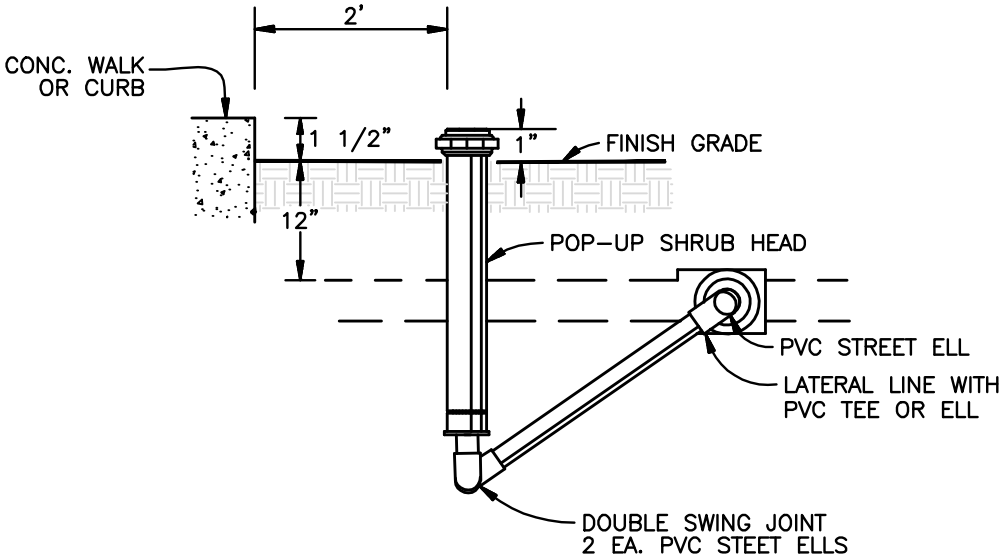

GENERAL NOTES:

1. INSTALL HI-POP IRR. HEAD 1" ABOVE FINISHED GRADE. FINISHED GRADE TO BE 1 1/2" BELOW HARDSCAPE.
2. INSTALL CHECK VALVES FOR LOW HEAD DRAINAGE FOR SYSTEMS WITH A 4' OR MORE ELEVATION CHANGE BETWEEN HEADS.
3. NO SPRAY HEADS ARE TO BE INSTALLED LESS THAN 24" AWAY FROM HARDSCAPE OR NON-PERMEABLE SURFACE.
4. STANDARD SPRAY IRRIGATION HEADS ARE PROHIBITED IN THE CITY OF RIALTO. HI-EFFICIENCY SPRAY HEADS SUCH AS ROTATORS ARE DISCOURAGED. HOWEVER, THEIR USE WILL BE REVIEWED BY THE CITY OF RIALTO ON A CASE BY CASE BASIS.

NOT TO SCALE

APPROVED BY:

6/28/16

P.W. DIRECTOR/CITY ENGINEER DATE

REVISIONS			
DATE	BY	MARK	APPROVED

POP-UP SHRUB HEAD

CITY OF RIALTO, CALIFORNIA
PUBLIC WORKS DEPARTMENT
ENGINEERING DIVISION

STD. NO. LMD-IRR-616 | SHT 1 OF 1

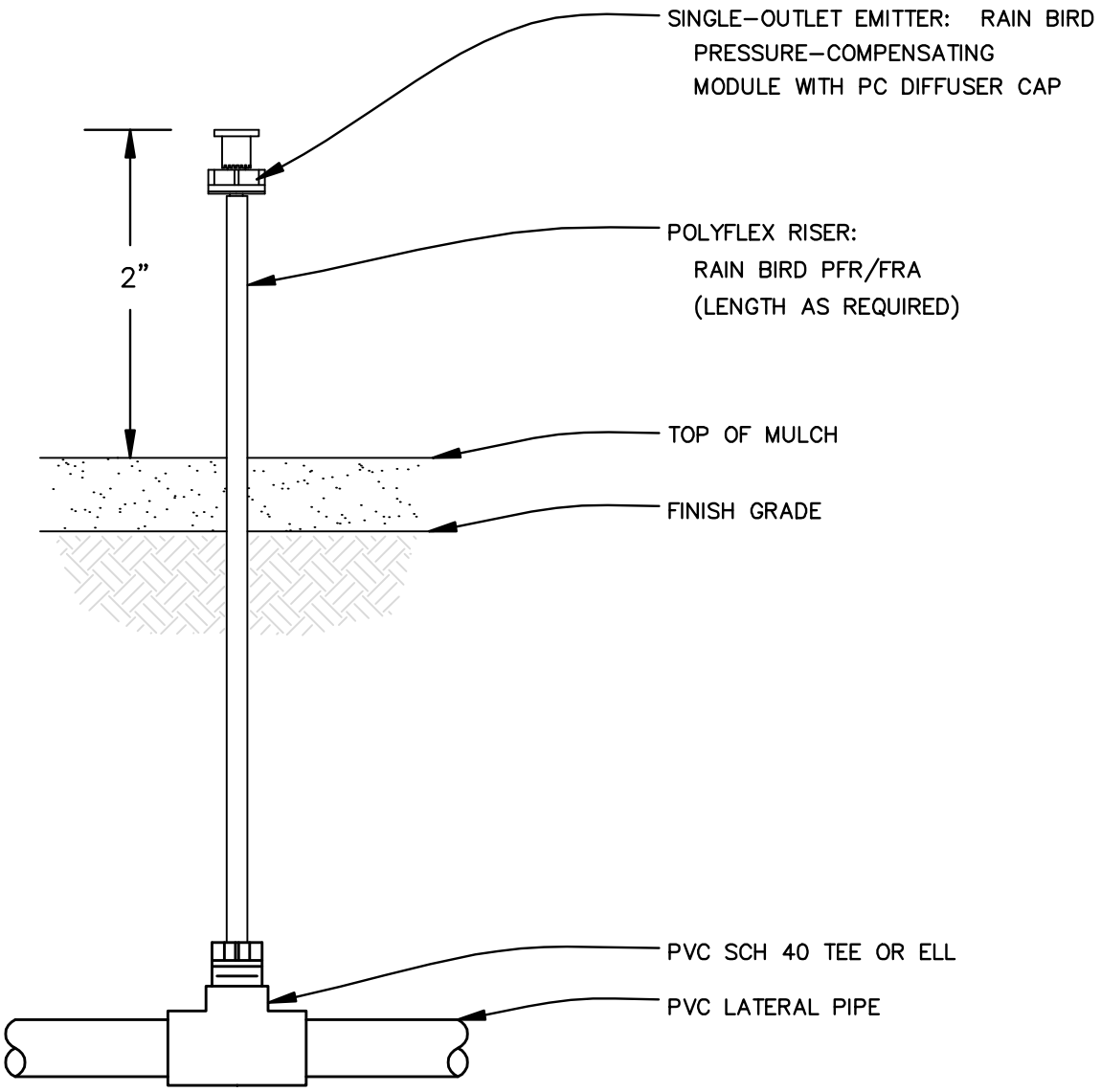

NOT TO SCALE

APPROVED BY:

6/28/16

P.W. DIRECTOR/CITY ENGINEER DATE

REVISIONS			
DATE	BY	MARK	APPROVED

EMITTR ON POLYFLEX RISER

CITY OF RIALTO, CALIFORNIA
PUBLIC WORKS DEPARTMENT
ENGINEERING DIVISION

STD. NO. LMD–IRR–617 | SHT 1 OF 1

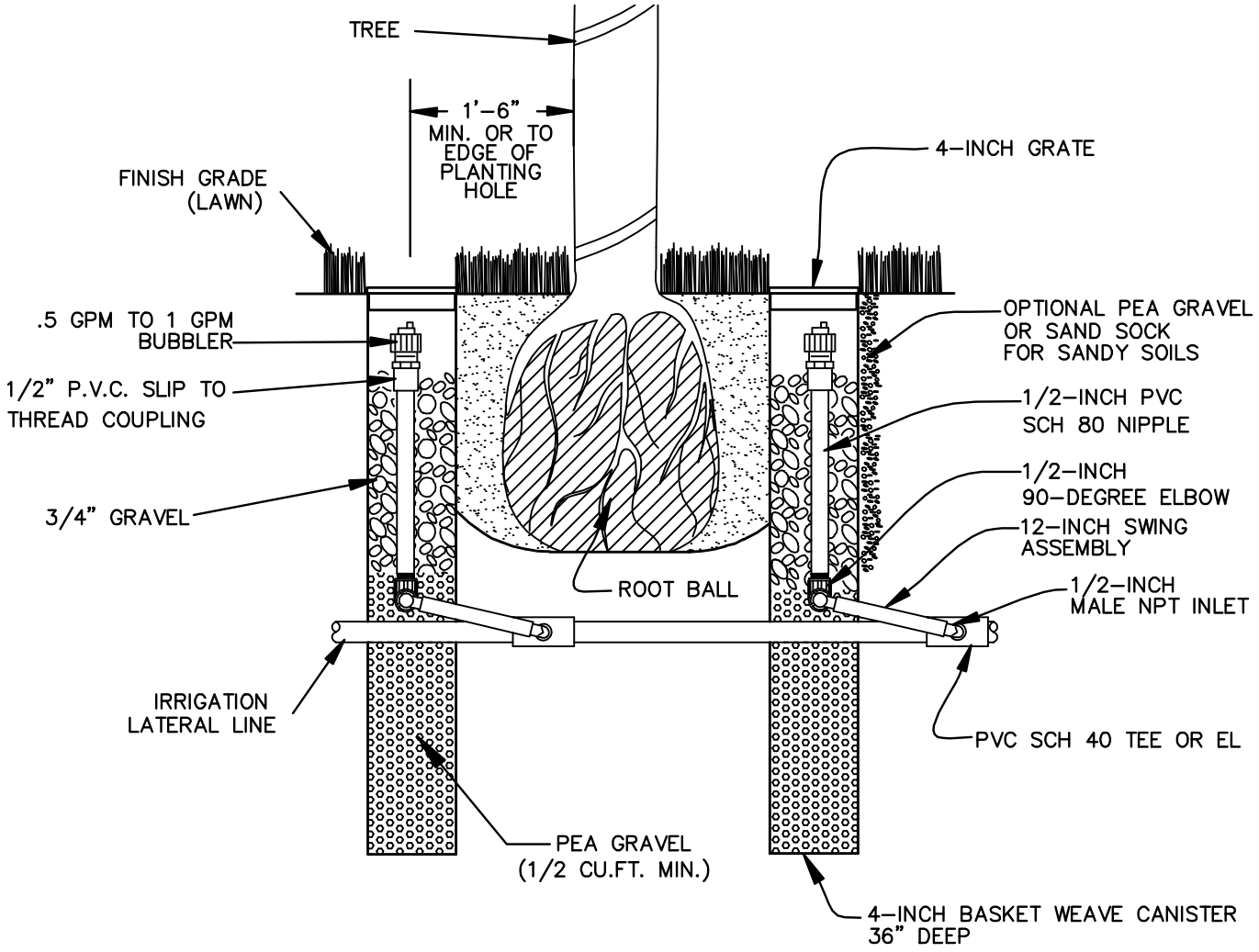

GENERAL NOTES:

1. NO NATIVE BACKFILL ALLOWED WITHIN THE DEEP ROOT WATERING TUBES.
2. DEEP ROOT WATERING TUBES ARE TO BE SPACED EVENLY FROM THE ROOT BALL AND FROM EACH OTHER.
3. TOP OF DEEP ROOT WATERING TUBE SHOULD BE EVEN WITH FINISH GRADE.

NOT TO SCALE

APPROVED BY:

6/28/16

P.W. DIRECTOR/CITY ENGINEER DATE

REVISIONS

DATE	BY	MARK	APPROVED

DEEP ROOT WATERING

CITY OF RIALTO, CALIFORNIA
PUBLIC WORKS DEPARTMENT
ENGINEERING DIVISION

STD. NO. LMD-IRR-618 | SHT 1 OF 1

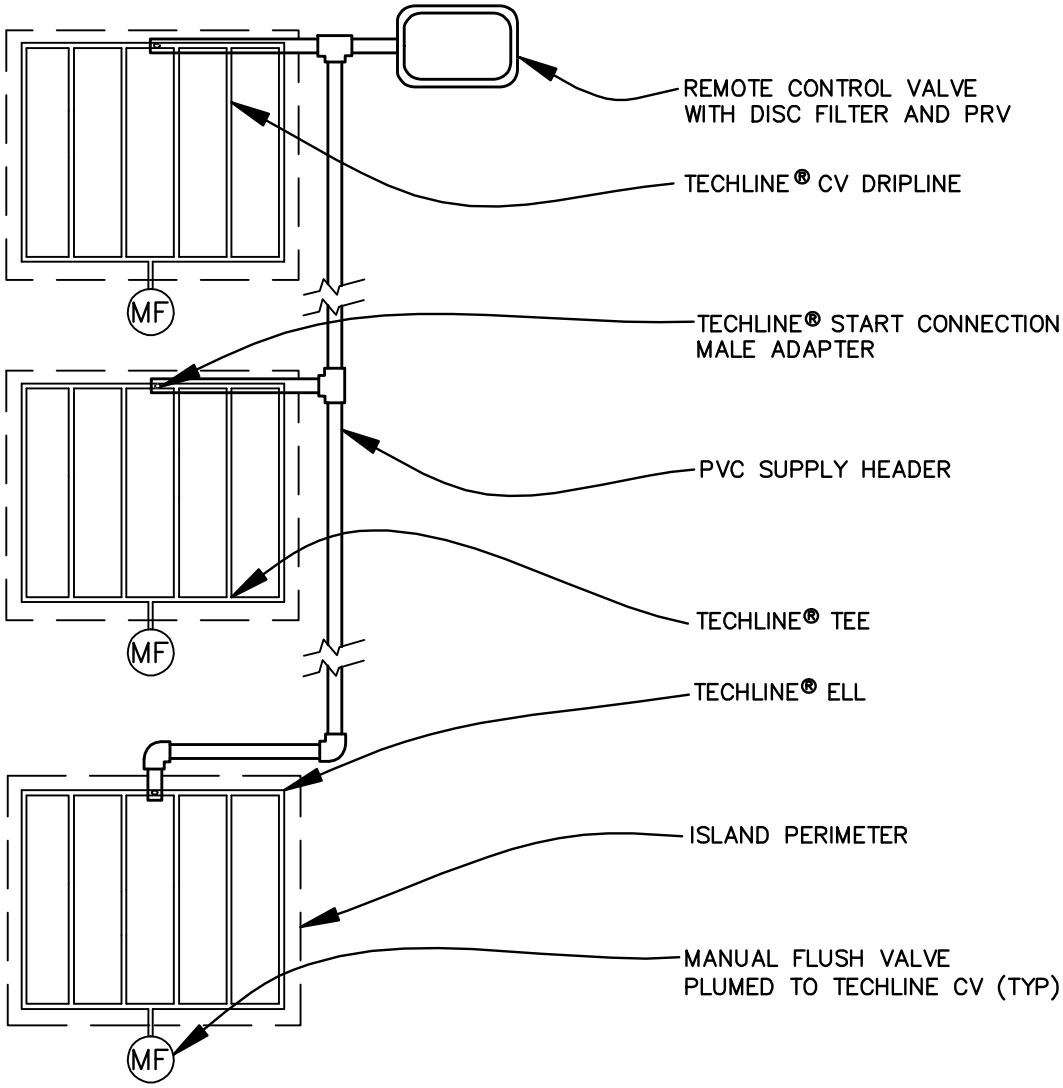

GENERAL NOTES:

1. ALL DRIPLINE TO BE BURIED 2" BELOW FINISH GRADE UNLESS 3" OF MULCH OR OTHER COVER IS ON TOP OF DRIPLINE.

2. REFER TO MANUFACTURES RECOMMENDATIONS FOR MAXIMUM RUN LENGTHS. WWW.NETAFIMUSA.COM

NOT TO SCALE

APPROVED BY:

6/28/16

P.W. DIRECTOR/CITY ENGINEER DATE

REVISIONS			
DATE	BY	MARK	APPROVED

TECHLINE ® CV ISLAND LAYOUT

CITY OF RIALTO, CALIFORNIA
PUBLIC WORKS DEPARTMENT
ENGINEERING DIVISION

STD. NO. LMD-IRR-619 | SHT 1 OF 3

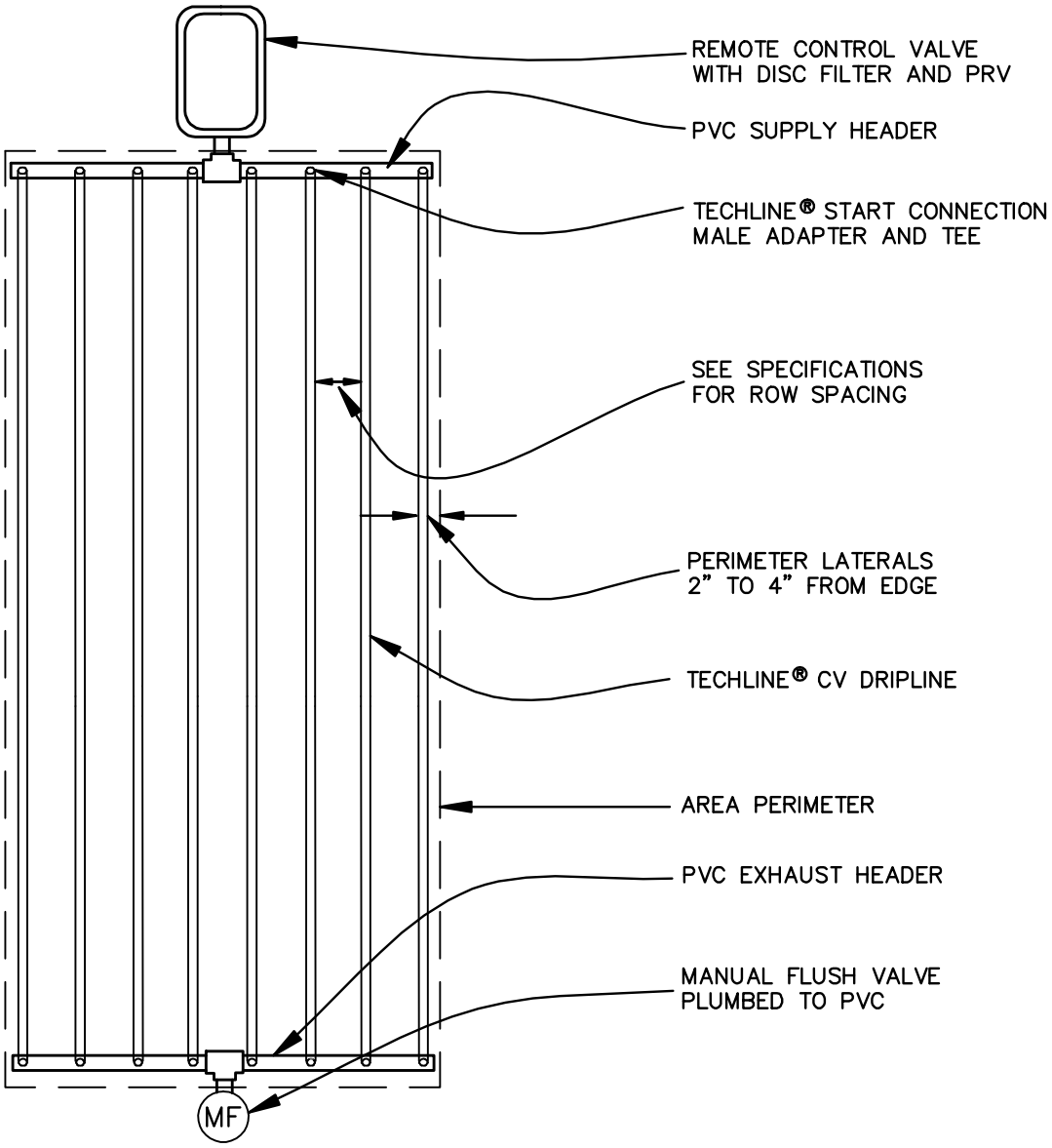

GENERAL NOTES:

1. ALL DRIPLINE TO BE BURIED 2" BELOW FINISH GRADE UNLESS 3" OF MULCH OR OTHER COVER IS ON TOP OF DRIPLINE.

2. REFER TO MANUFACTURES RECOMMENDATIONS FOR MAXIMUM RUN LENGTHS. WWW.NETAFIMUSA.COM

NOT TO SCALE

APPROVED BY:

6/28/16

P.W. DIRECTOR/CITY ENGINEER DATE

REVISIONS			
DATE	BY	MARK	APPROVED

TECHLINE ® CV END FEED LAYOUT

CITY OF RIALTO, CALIFORNIA
PUBLIC WORKS DEPARTMENT
ENGINEERING DIVISION

STD. NO. LMD-IRR-619 | SHT 2 OF 3

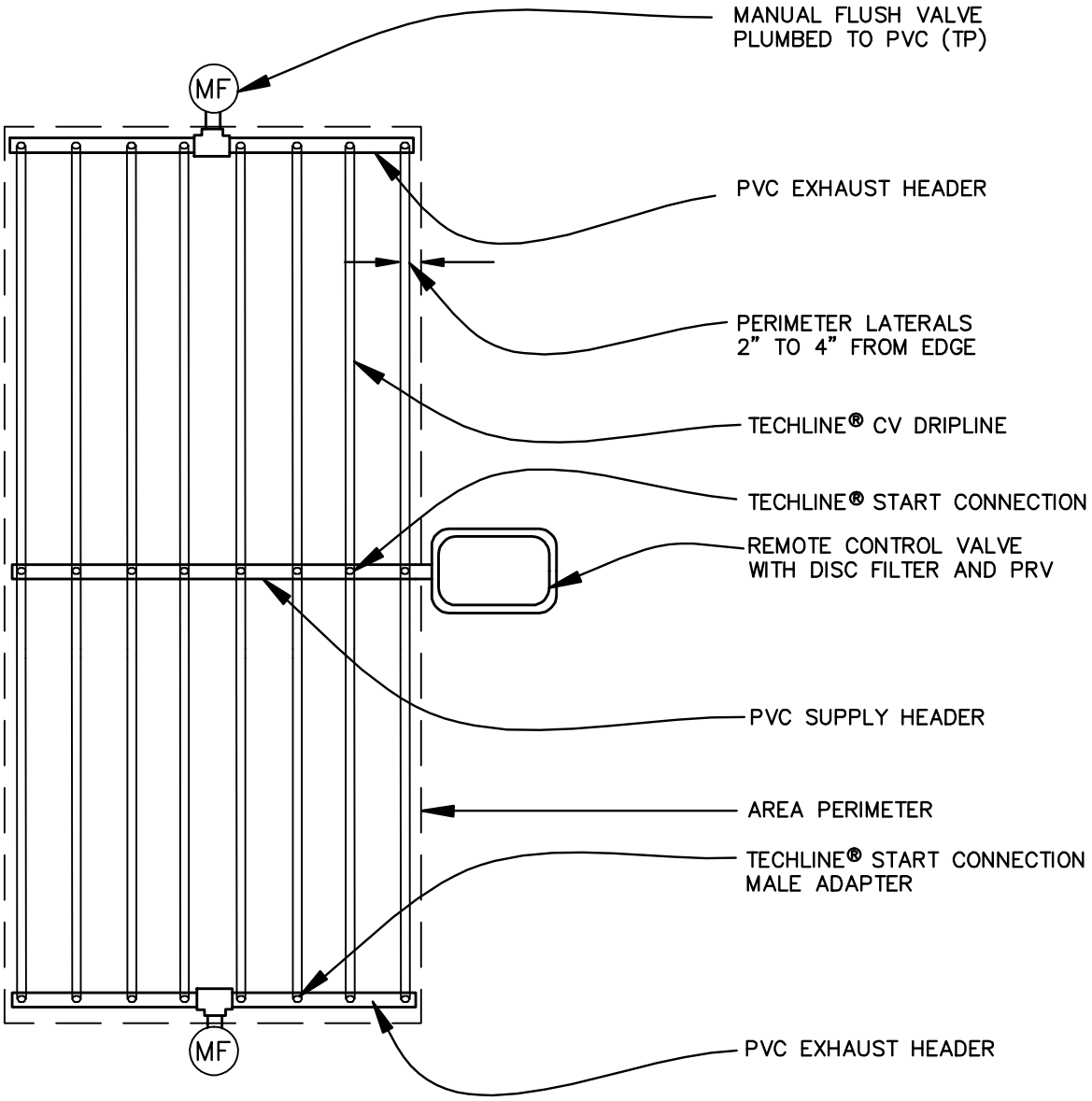

GENERAL NOTES:

1. ALL DRIPLINE TO BE BURIED 2" BELOW FINISH GRADE UNLESS 3" OF MULCH OR OTHER COVER IS ON TOP OF DRIPLINE.

2. REFER TO MANUFACTURES RECOMMENDATIONS FOR MAXIMUM RUN LENGTHS. WWW.NETAFIMUSA.COM

NOT TO SCALE

APPROVED BY:

P.W. DIRECTOR/CITY ENGINEER — DATE 6/28/16

REVISIONS			
DATE	BY	MARK	APPROVED

TECHLINE ® CV CENTER FEED LAYOUT

CITY OF RIALTO, CALIFORNIA
PUBLIC WORKS DEPARTMENT
ENGINEERING DIVISION

STD. NO. LMD-IRR-619 | SHT 3 OF 3

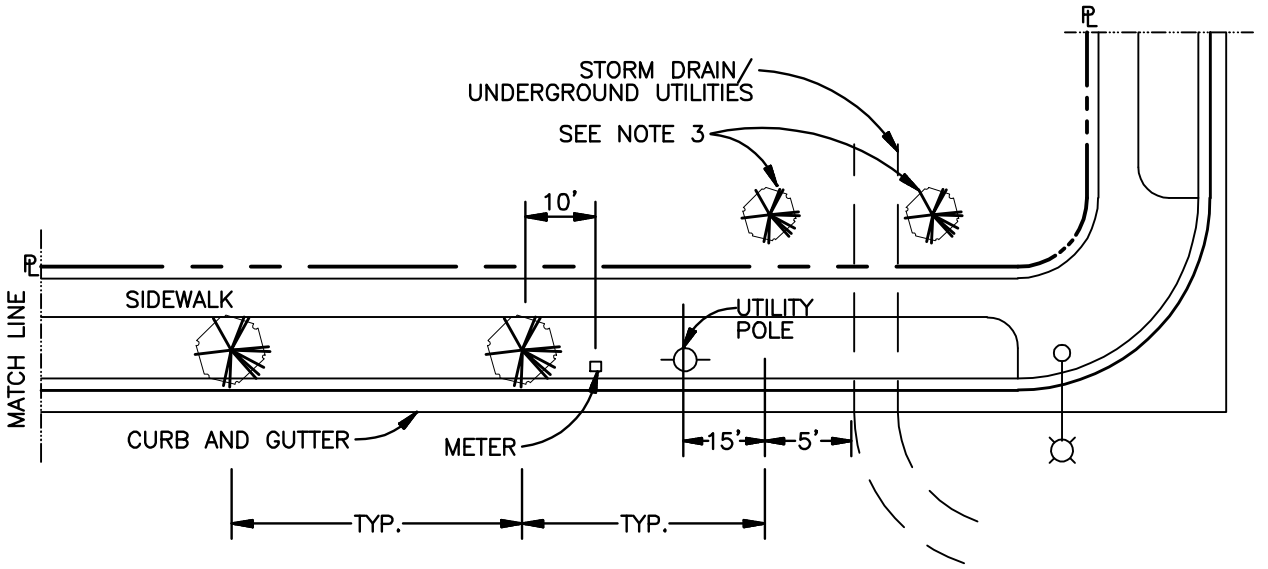

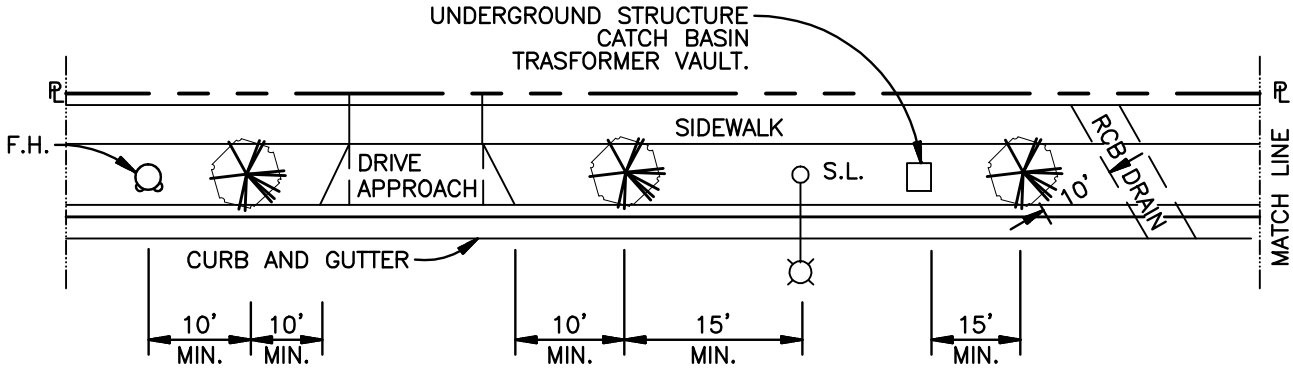

GENERAL NOTES:

1. TREE SPACING SHALL CONFORM TO PLANS APPROVED BY THE CITY ENGINEER.
2. ALL TREES IN THE R.O.W. ARE SUBJECT TO LINE.OF.SIGHT CRITERIA AS APPROVED BY TRAFFIC ENGINEER.
3. AT ALL LOCAL RESIDENTIAL INTERSECTIONS THE FIRST TWO PARKWAY TREES AT ALL APPROACHES TO BE PLACED BEHIND SIDEWALK.
4. MAINTAIN 10 FEET FROM CENTER OF TREE TO EDGE OF ALL UNDERGROUND FACILITIES.
5. MAINTAIN 15 FEET FROM ALL STREET LIGHTS, UTILITIES STRUCTURES AND VALVE BOXES.

NOT TO SCALE

APPROVED BY:

6/28/16

P.W. DIRECTOR/CITY ENGINEER DATE

REVISIONS

DATE	BY	MARK	APPROVED

TREE PLACEMENT

CITY OF RIALTO, CALIFORNIA
PUBLIC WORKS DEPARTMENT
ENGINEERING DIVISION

STD NO. LMD-PLT-650 | SHT 1 OF 1

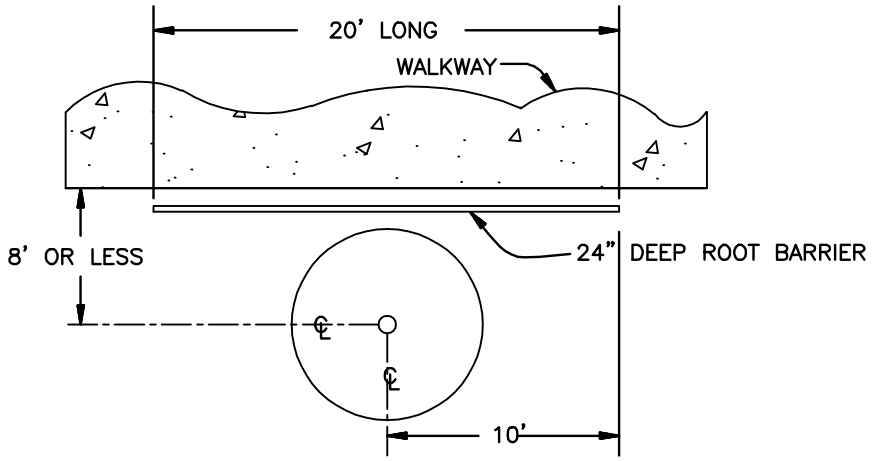

TREE AT BACK OF SIDEWALK

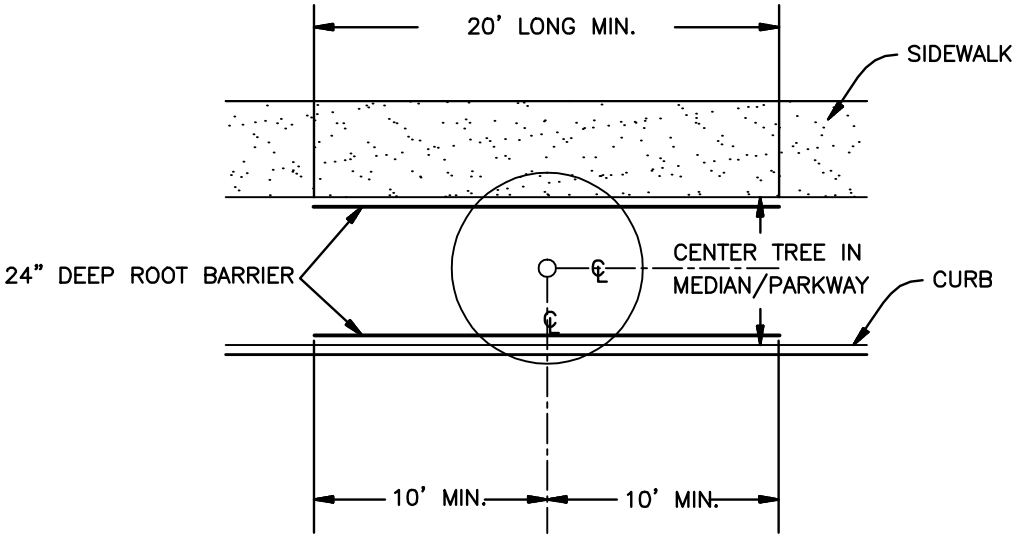

TREE IN PARKWAY

NOTES:

1. TREES SHALL NOT BE PLANTED WITHIN 30' OF BEGINNING OF CURVE RADIUS OR WITHIN 15' OF STREET LIGHTS, FIRE HYDRANTS, DRIVEWAYS, ANY METERS OR UTILITIES. REFER TO STANDARD NO. LMD-PLT-650.
2. INSTALL 24" DEEP ROOT BARRIER PANEL WHEN PLANTED WITH IN 8' OF HARDSCAPE. ROOT BARRIER PANEL SHOULD EXTEND 10' MINIMUM FROM THE CENTER OF THE TREE TRUNK IN BOTH DIRECTIONS.

NOT TO SCALE

APPROVED BY:

P.W. DIRECTOR/CITY ENGINEER — DATE: 6/28/16

REVISIONS			
DATE	BY	MARK	APPROVED

TREE PLANTING AND TREE STAKING

CITY OF RIALTO, CALIFORNIA
PUBLIC WORKS DEPARTMENT
ENGINEERING DIVISION

STD. NO. LMD-PLT-651 | SHT 2 OF 2

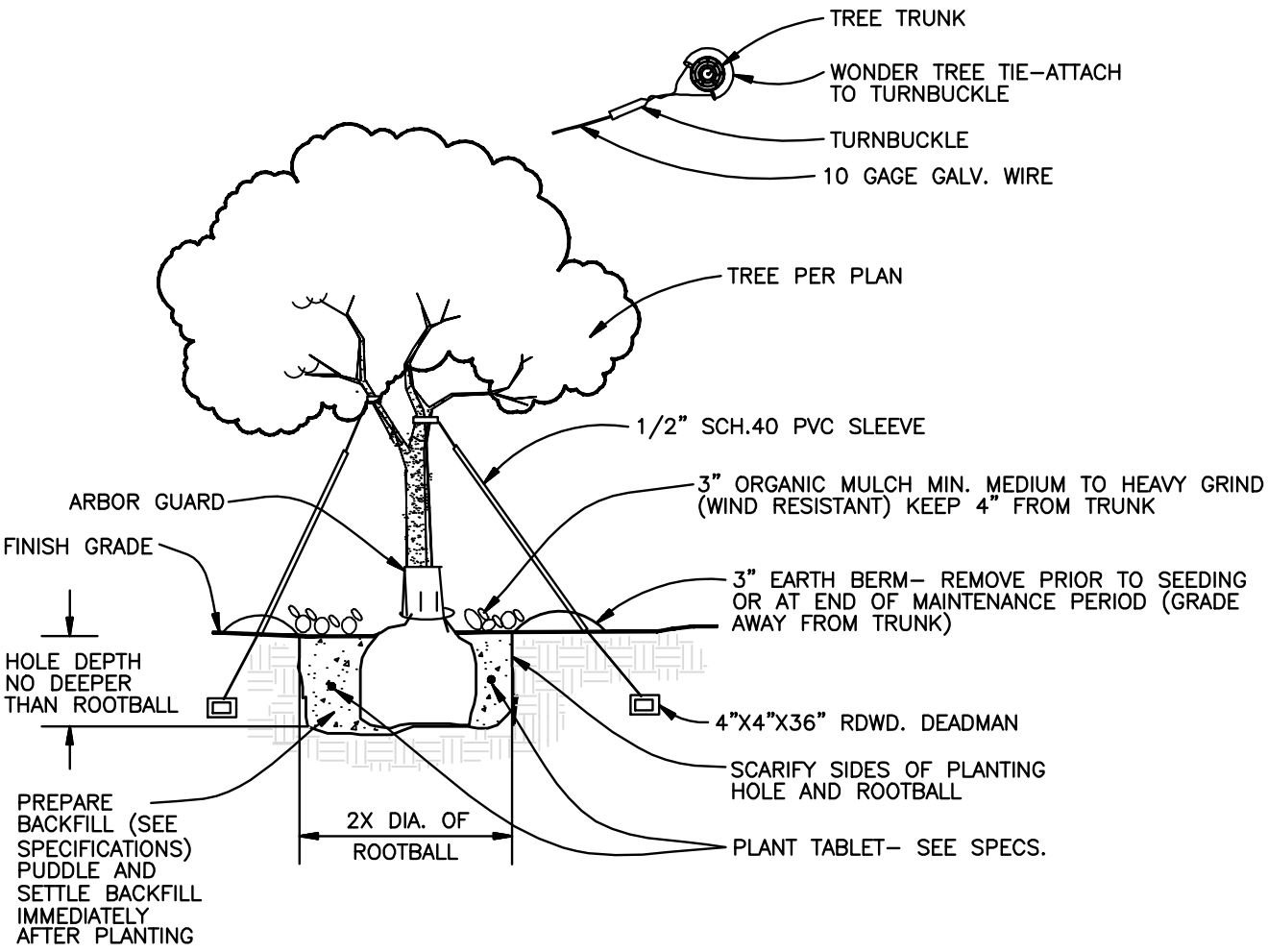

NOTES:

1. UNDER NO CIRCUMSTANCES IS ROOT CROWN OF TREE TO BE BURRIED BELOW SOIL LEVEL. SET 1" ABOVE FINISH GRADE.
2. REMOVE NURSERY STAKE AS REQUIRED FOR HEALTH OF THE TREE. (GONE AT END OF MAINTENANCE PERIOD)

NOT TO SCALE

APPROVED BY:

6/28/16

P.W. DIRECTOR/CITY ENGINEER DATE

REVISIONS

DATE	BY	MARK	APPROVED

TREE GUYING

CITY OF RIALTO, CALIFORNIA
PUBLIC WORKS DEPARTMENT
ENGINEERING DIVISION

STD. NO. LMD–PLT–652 | SHT 1 OF 1

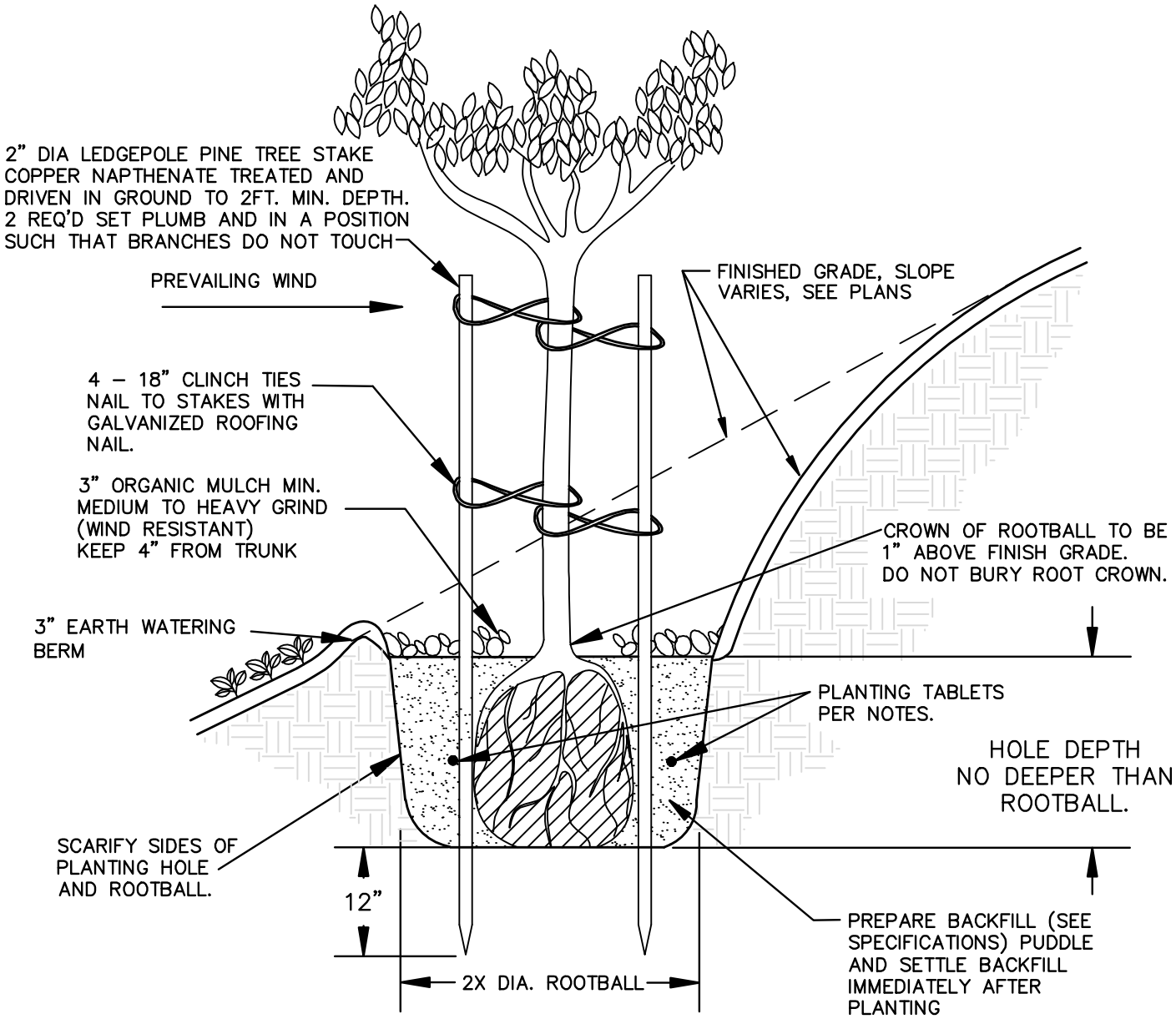

NOTES:

1. UNDER NO CIRCUMSTANCES IS ROOT CROWN OF TREE TO BE BURIED BELOW SOIL LEVEL. SET 1" ABOVE FINISH GRADE.
2. REMOVE NURSERY STAKE AS REQUIRED FOR HEALTH OF THE TREE. (GONE AT END OF MAINTENANCE PERIOD)

NOT TO SCALE

APPROVED BY:

6/28/16

P.W. DIRECTOR/CITY ENGINEER DATE

REVISIONS			
DATE	BY	MARK	APPROVED

SLOPE TREE PLANTING

CITY OF RIALTO, CALIFORNIA
PUBLIC WORKS DEPARTMENT
ENGINEERING DIVISION

STD. NO. LMD–PLT–653 | SHT 1 OF 1

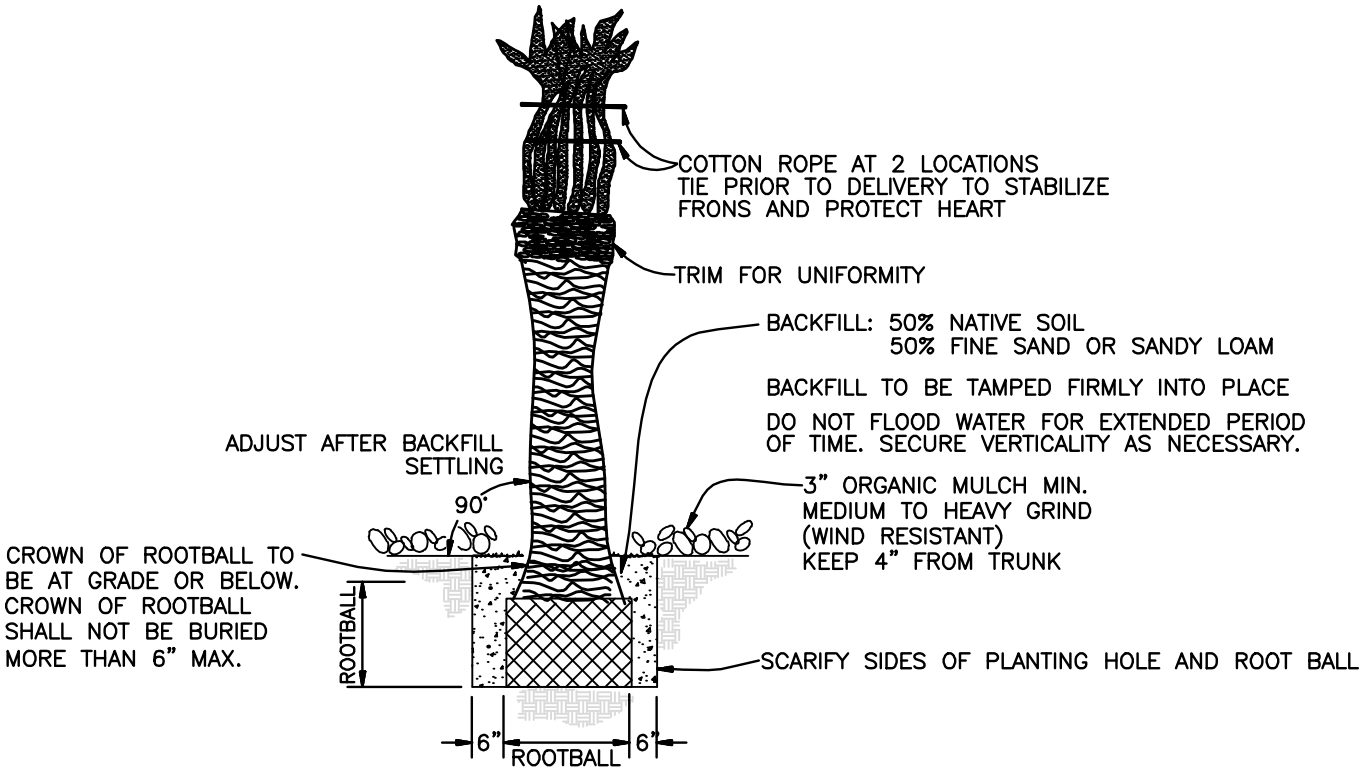

NOTES:

1. PALM SHALL BE TRIMMED, CLEANED AND TIED AT ORIGINAL LOCATION PRIOR TO TRANSPLANTING.
2. LANDSCAPE ARCHITECT TO INSPECT PALMS AT SITE PRIOR TO INSTALLATION. NOTIFY AT LEAST 48 HOURS IN ADVANCE.
3. CROWN OF ROOTBALL TO BE AT GRADE OR BURIED NO MORE THAN 6". UNDER NO CIRCUMSTANCES IS MORE THAN 6" OF TRUNK TO BE BURIED BELOW FINISH GRADE.
4. FERTILIZERS ARE NOT TO BE USED AT TIME OF PLANTING.
5. PALM FRONDS TO REMAIN TIED IN AN UPRIGHT POSITION FOR A MINIMUM OF 60 DAYS.
6. AT TIME OF UNTYING, PRUNE ALL LOWER FRONDS AS REQUIRED TO CLEAR WAY FOR PEDESTRIAN OR VEHICULAR ACCESS.

NOT TO SCALE

APPROVED BY:

6/28/16

P.W. DIRECTOR/CITY ENGINEER DATE

REVISIONS			
DATE	BY	MARK	APPROVED

PALM TREE PLANTING

CITY OF RIALTO, CALIFORNIA
PUBLIC WORKS DEPARTMENT
ENGINEERING DIVISION

STD. NO. LMD-PLT-654 | SHT 1 OF 1

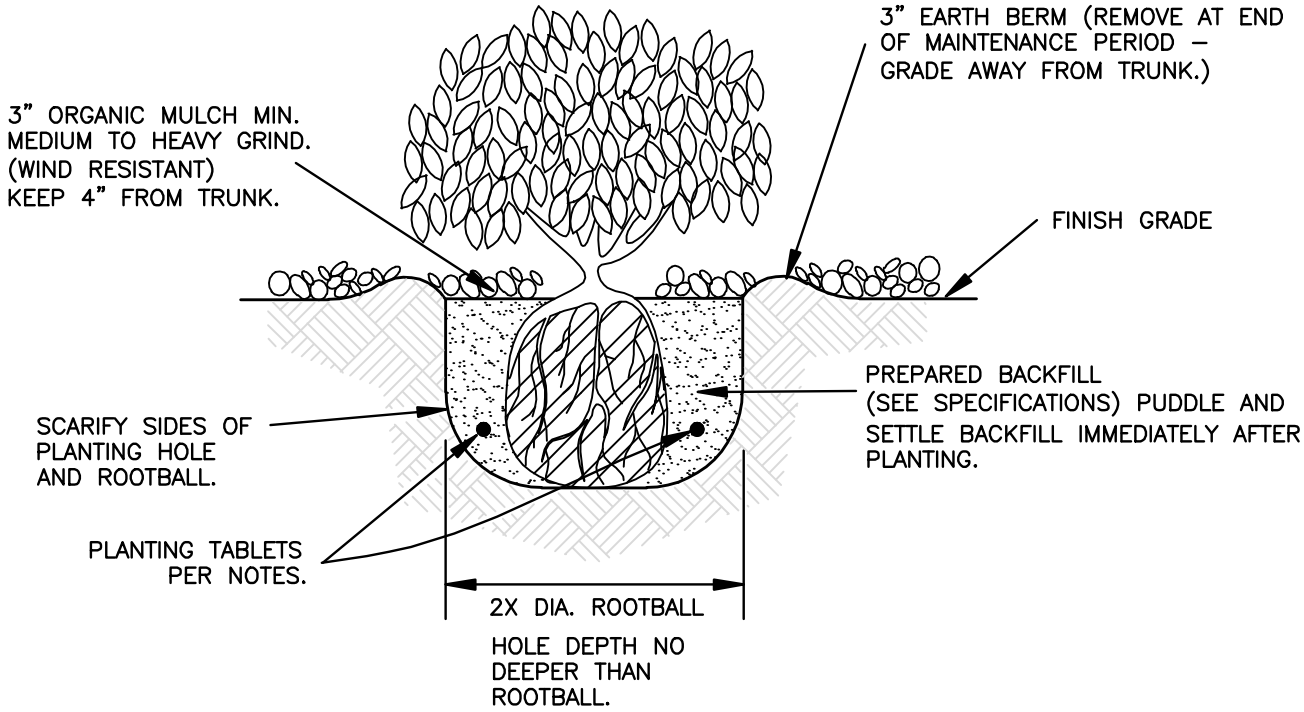

NOTE:

UNDER NO CIRCUMSTANCES IS ROOT CROWN OF SHRUB TO BE BURIED BELOW SOIL LEVEL. ROOT CROWN OF SHRUB TO BE 1" ABOVE FINISH GRADE.

NOT TO SCALE

APPROVED BY:

6/28/16

P.W. DIRECTOR/CITY ENGINEER DATE

REVISIONS			
DATE	BY	MARK	APPROVED

SHRUB PLANTING

CITY OF RIALTO, CALIFORNIA
PUBLIC WORKS DEPARTMENT
ENGINEERING DIVISION

STD NO. LMD–PLT–655 | SHT 1 OF 1

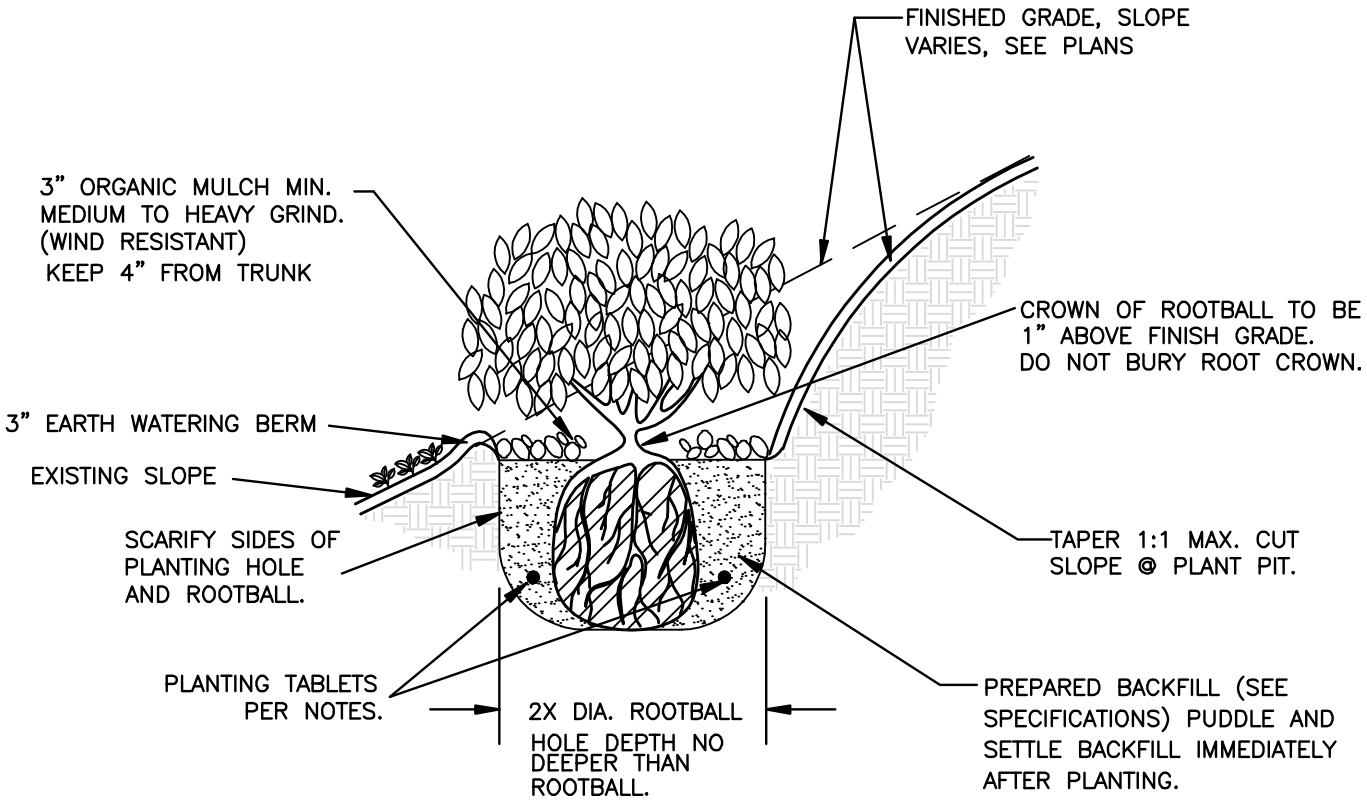

NOTE:

UNDER NO CIRCUMSTANCES IS ROOT CROWN OF SHRUB TO BE BURIED BELOW SOIL LEVEL. ROOT CROWN OF SHRUB TO BE 1" ABOVE FINISH GRADE.

NOT TO SCALE

APPROVED BY:

6/28/16

P.W. DIRECTOR/CITY ENGINEER DATE

REVISIONS			
DATE	BY	MARK	APPROVED

SHRUB PLANTING ON SLOPE

CITY OF RIALTO, CALIFORNIA
PUBLIC WORKS DEPARTMENT
ENGINEERING DIVISION

STD. NO. LMD-PLT-656 | SHT 1 OF 1

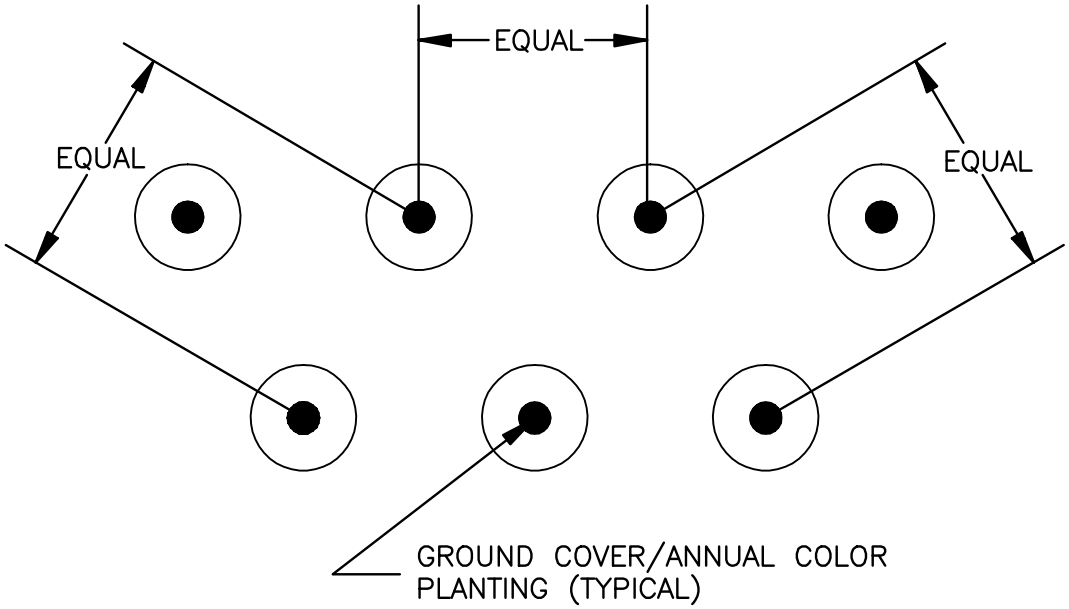

NOTE:

1. GROUND COVER/ANNUAL COLOR PLANTING SHALL BE TRIANGULAR SHAPED 'ON-CENTER' AS INDICATED IN PLANT LIST.
2. MULCH GROUND COVER AREAS AFTER PLANTING USING 3" DEPTH OF ORGANIC MULCH MIN. 2" MULCH DEPTH FOR FLATS AND ANNUAL COLOR PLANTING. MEDIUM TO HEAVY GRIND. (WIND RESISTANT)
3. GROUND COVER TO ACHIEVE 100% EFFECTIVE COVERAGE WITHIN ONE (1) YEAR OF PLANTING.

NOT TO SCALE

APPROVED BY:

6/28/16

P.W. DIRECTOR/CITY ENGINEER DATE

REVISIONS			
DATE	BY	MARK	APPROVED

GROUND COVER PLANTING

CITY OF RIALTO, CALIFORNIA
PUBLIC WORKS DEPARTMENT
ENGINEERING DIVISION

STD. NO. LMD-PLT-657 | SHT 1 OF 1

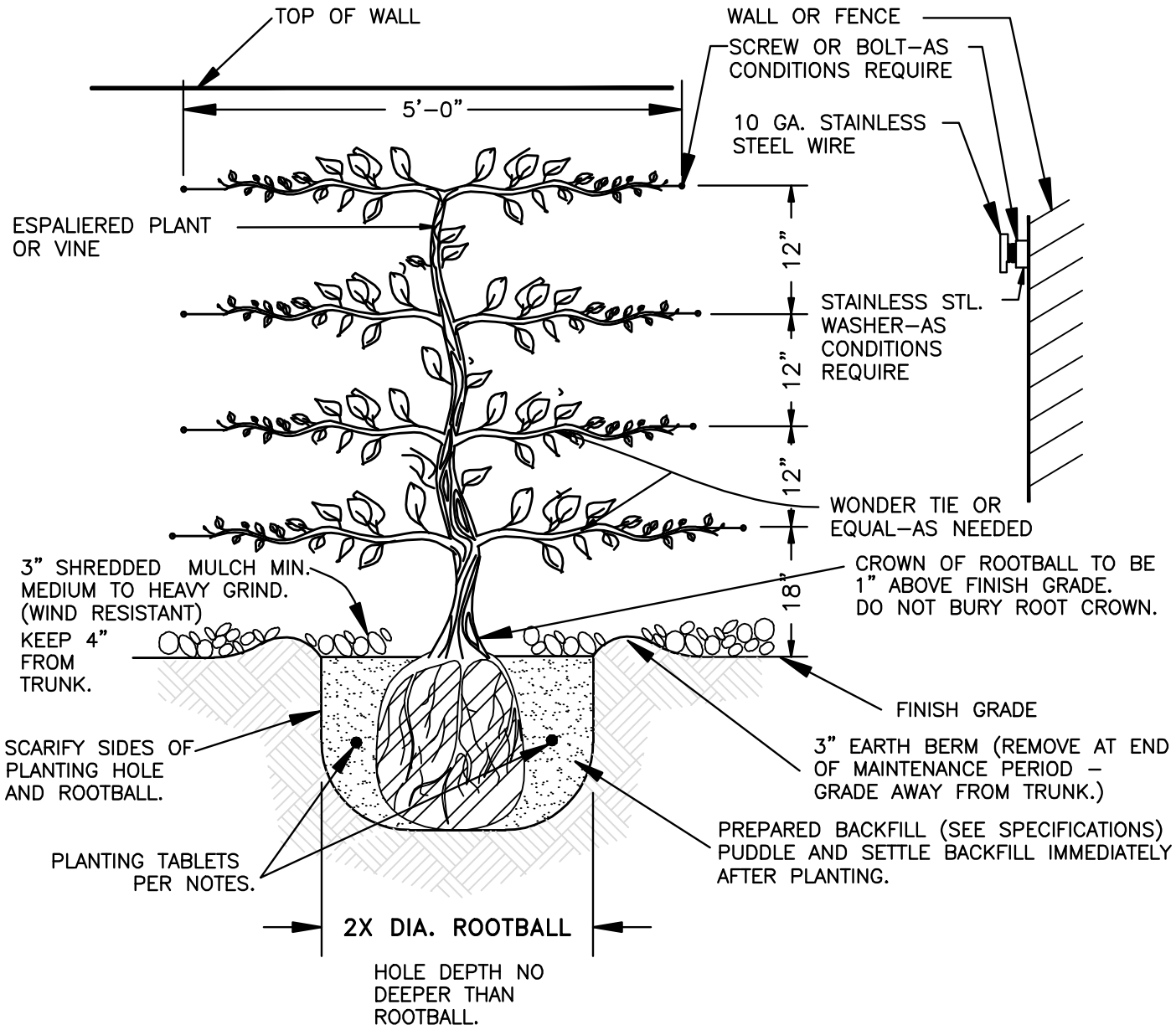

NOTE:

PAINT BOLT OR SCREW TO MATCH SURFACE BEHIND

NOT TO SCALE

APPROVED BY:

6/28/16

P.W. DIRECTOR/CITY ENGINEER DATE

REVISIONS			
DATE	BY	MARK	APPROVED

VINE PLANTING

CITY OF RIALTO, CALIFORNIA
PUBLIC WORKS DEPARTMENT
ENGINEERING DIVISION

STD. NO. LMD-PLT-658 | SHT 1 OF 1

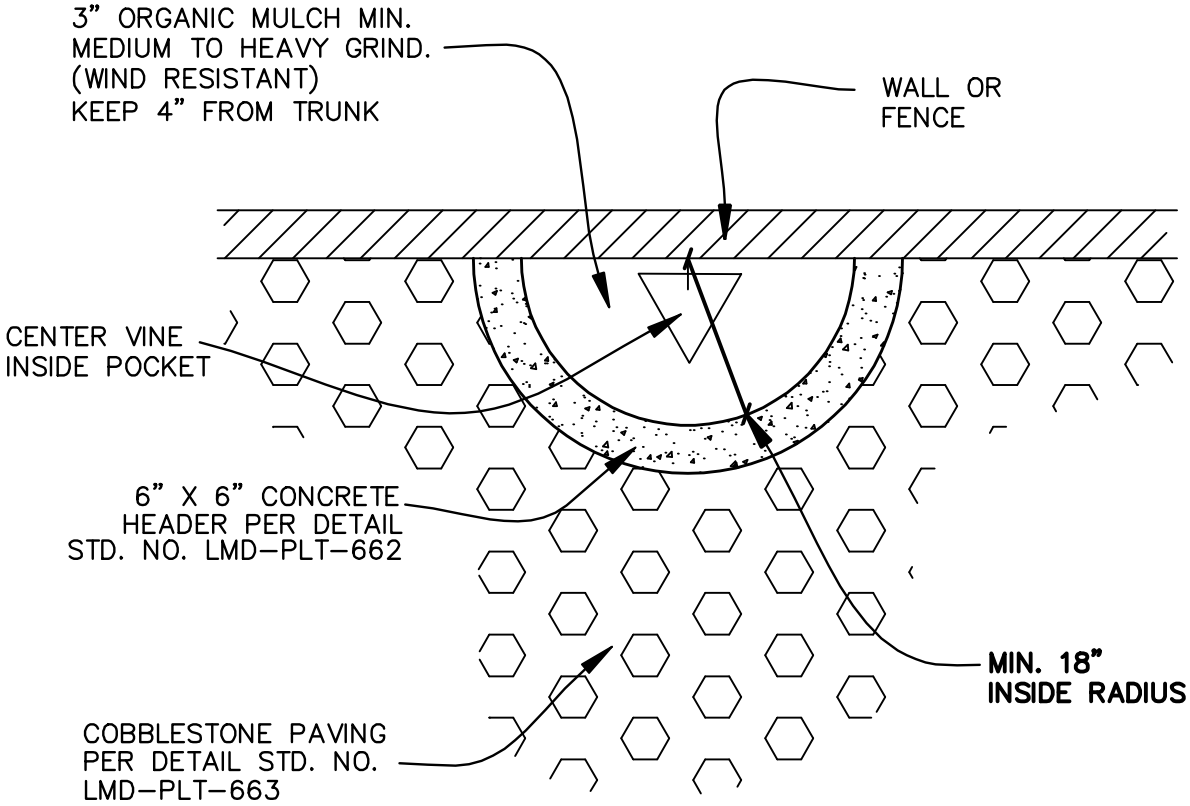

NOTES:

1. POURED CONCRETE HEADER SHALL BE FORMED ON BOTH SIDES WITH SMOOTH STEEL TROWL FINISH ON THE TOP AND 3/4" RADIUS EDGES.
2. TOP OF HEADER SHALL BE 1" ABOVE FINISH GRADE AND CURVES SHALL BE UNIFORM AND FREE FLOWING.
3. HEADER SHALL BE INSTALLED PER CONCRETE HEADER DETAIL STD. LMD-PLT-662.

NOT TO SCALE

APPROVED BY:

6/28/16

P.W. DIRECTOR/CITY ENGINEER DATE

REVISIONS

DATE	BY	MARK	APPROVED

VINE POCKET

CITY OF RIALTO, CALIFORNIA
PUBLIC WORKS DEPARTMENT
ENGINEERING DIVISION

STD. NO. LMD-PLT-659 | SHT 1 OF 1

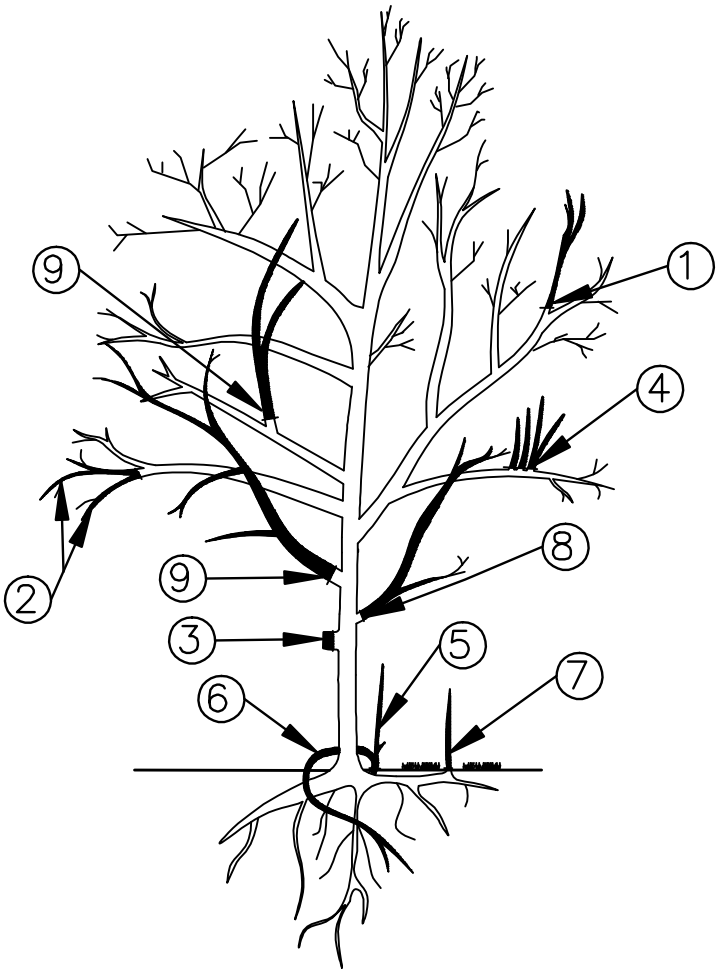

THE TREE IS TRIMMED TO ACHIEVE A SYMMETRICAL BALANCE THAT MAINTAINS THE TREE'S MAXIMUM HEALTH AND AESTHETIC VALUE.

THE TRIMMING INCLUDES:

1. TRIMMING "DOUBLE LEADERS" WITH A WEAK CROTCH. SELECT ONE LEADER AND REMOVE THE OTHER.
2. PRUNING "SLOW GROWING HANGERS" OR "DROPPERS" BACK TO A PRIMARY OR SECONDARY BRANCH.
3. PRUNING THE "BRANCH STUBS" ON THE TRUNK BACK TO THE BRANCH COLLAR. DO NOT FLUSH CUT BACK TO TRUNK.
4. PRUNING "WATER SPOUTS" FLUSH TO THE BRANCH.
5. PRUNING ALL "BASE SUCKERS" FLUSH TO THE BASE OF THE TREE.
6. PRUNING ALL "GIRDLING ROOTS" TO PREVENT FURTHER DAMAGE.
7. REMOVING ALL "ROOT SUCKERS" BY PRUNING.
8. PRUNING TREE SKIRT TO LEGAL CLEARANCE HEIGHT.
9. REMOVING RUBBING, WEAK, DEAD OR CROSSING BRANCHES.

NOTES:

REMOVE ALL IVY, DEBRIS, MISTLETOE, AND UNDESIRABLE SUCKER GROWTH. THIS COMPLETE TRIMMING IS PERFORMED FROM THE GROUND OR FROM AN AERIAL DEVICE. IT INVOLVES MAKING POWER OR HAND SAW CUTS AND ALL NECESSARY POLE SAW OR PRUNING WORK. ALL CUTS TO USE PROPER UNDER CUTTING TECHNIQUES TO PREVENT BARK STRIPPING.

UNDER NO CIRCUMSTANCES SHALL THE TREE BE POLLARDED OR 'TOPPED'. DO NOT "LOINS TAIL" TREES BY REMOVING ALL SMALL AND MEDIUM INTERIOR BRANCHES.

ALL PRUNING SHALL BE SUPERVISED BY A CERTIFIED ARBORIST. PRUNING SHALL CONFORM TO NATIONAL ARBORIST ASSOCIATION STANDARDS.

NOT TO SCALE

APPROVED BY:

6/28/16

P.W. DIRECTOR/CITY ENGINEER DATE

REVISIONS

DATE	BY	MARK	APPROVED

TREE PRUNING

CITY OF RIALTO, CALIFORNIA
PUBLIC WORKS DEPARTMENT
ENGINEERING DIVISION

STD. NO. LMD-PLT-660 | SHT 1 OF 1

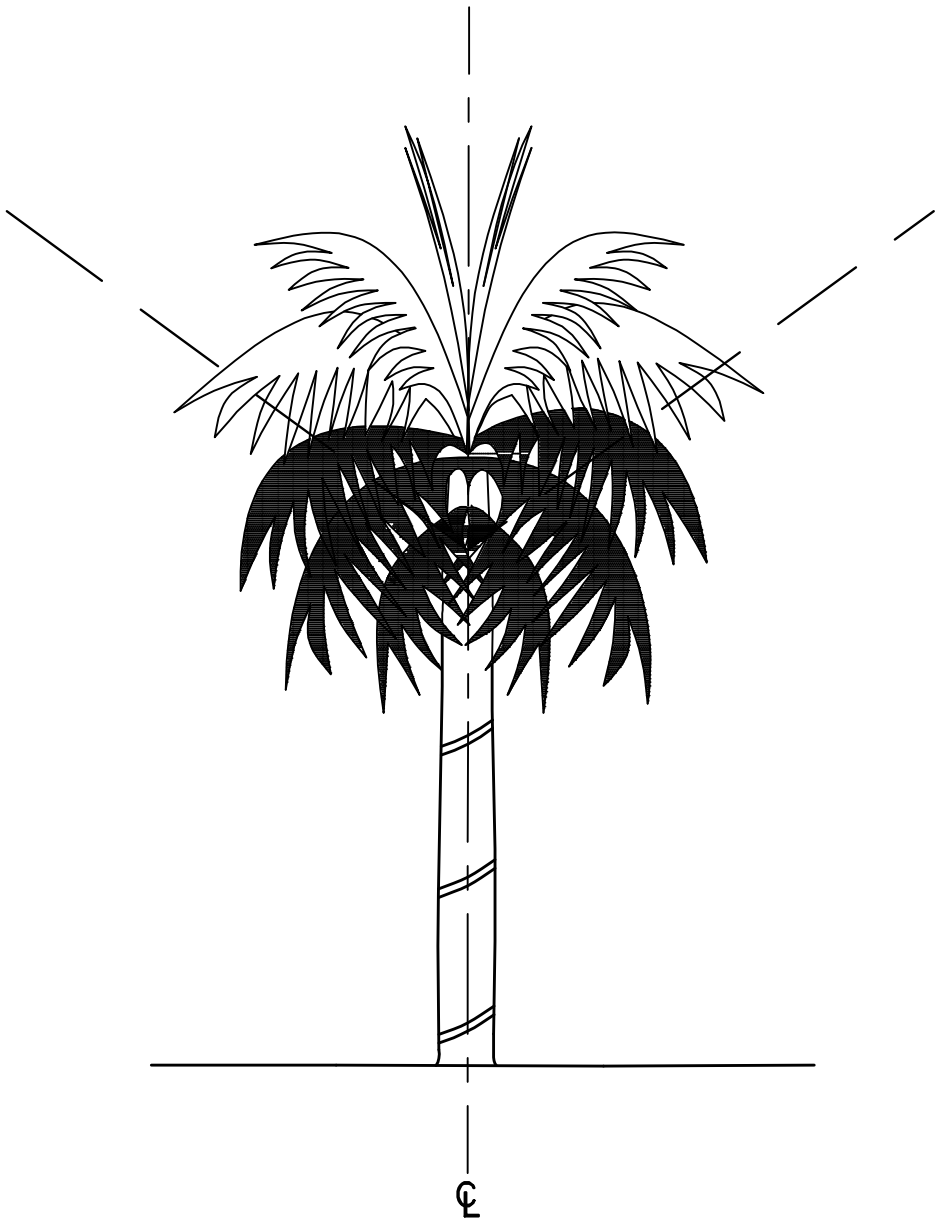

NOTES:

1. REMOVE ALL FRONDS LYING 50% OR MORE OUTSIDE 45° TRIANGLE. DO NOT OVER PRUNE.
2. NEW AND PREVIOUSLY REMOVED FRONDS TO BE CUT COMPLETELY BACK TO TRUNK.

NOT TO SCALE

APPROVED BY:

6/28/16

P.W. DIRECTOR/CITY ENGINEER DATE

REVISIONS			
DATE	BY	MARK	APPROVED

PALM PRUNING

CITY OF RIALTO, CALIFORNIA
PUBLIC WORKS DEPARTMENT
ENGINEERING DIVISION

STD. NO. LMD-PLT-661 | SHT 1 OF 1

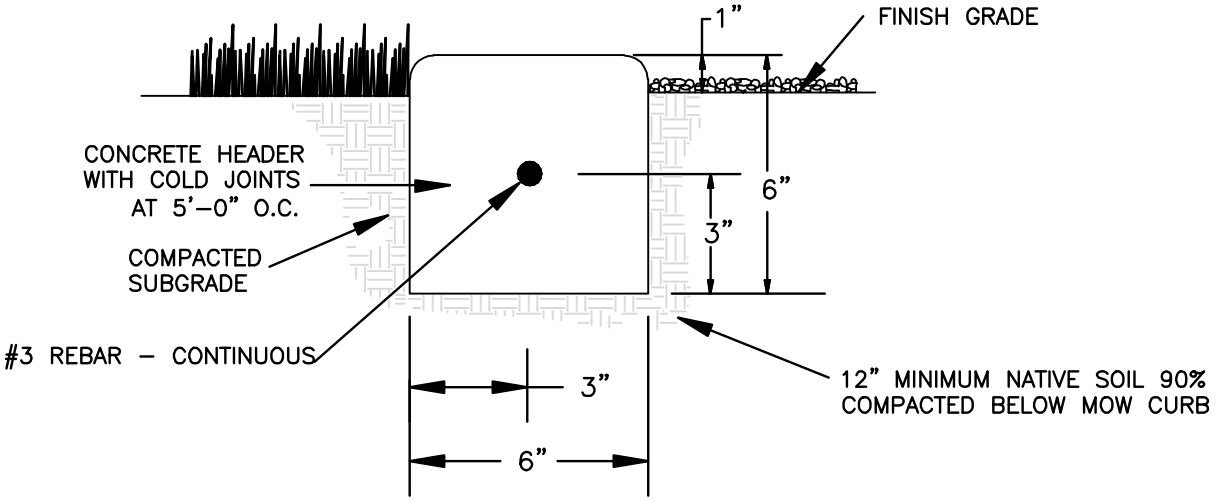

NOTES:

1. POURED CONCRETE HEADER SHALL BE FORMED ON BOTH SIDES WITH SMOOTH STEEL TROWEL FINISH ON THE TOP AND 3/4" RADIUS EDGES.

2. TOP OF HEADER SHALL BE 1" ABOVE FINISH GRADE AND CURVE SHALL BE UNIFORM AND FREE FLOWING.

3. CONCRETE HEADER TO BE PLACED BETWEEN ALL LANDSCAPE MAINTENANCE DISTRICT AREAS AND ON-SITE AREAS AND AT ALL LIMITS OF WORK AS NOTED ON PLANS.

4. CONCRETE HEADER SHALL BE PLACED BETWEEN ALL GRASS AND PLANTER AREAS UNLESS OTHERWISE NOTED.

5. CONCRETE HEADER SHALL BE PLACED BETWEEN ALL PARKING AREAS AND PLANTED AREAS.

NOT TO SCALE

APPROVED BY:

6/28/16

P.W. DIRECTOR/CITY ENGINEER DATE

REVISIONS			
DATE	BY	MARK	APPROVED

CONCRETE HEADER

CITY OF RIALTO, CALIFORNIA
PUBLIC WORKS DEPARTMENT
ENGINEERING DIVISION

STD. NO. LMD-PLT-662 | SHT 1 OF 1

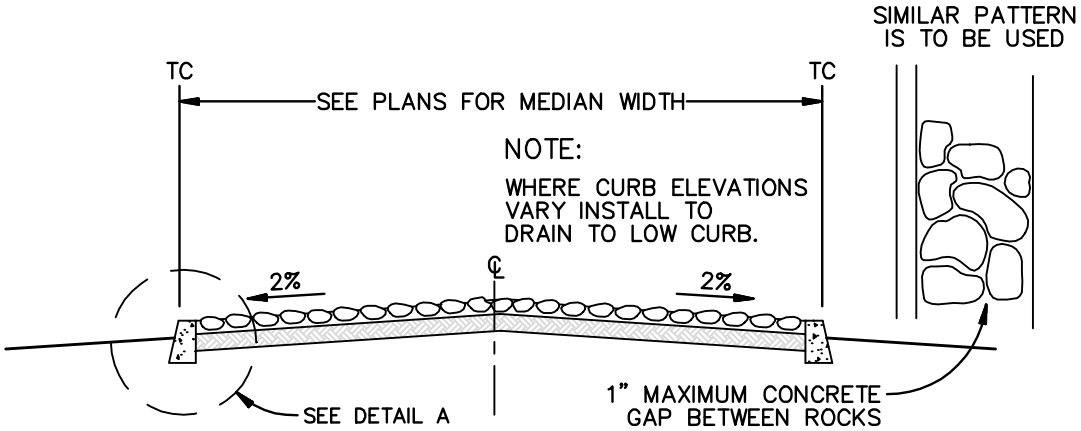

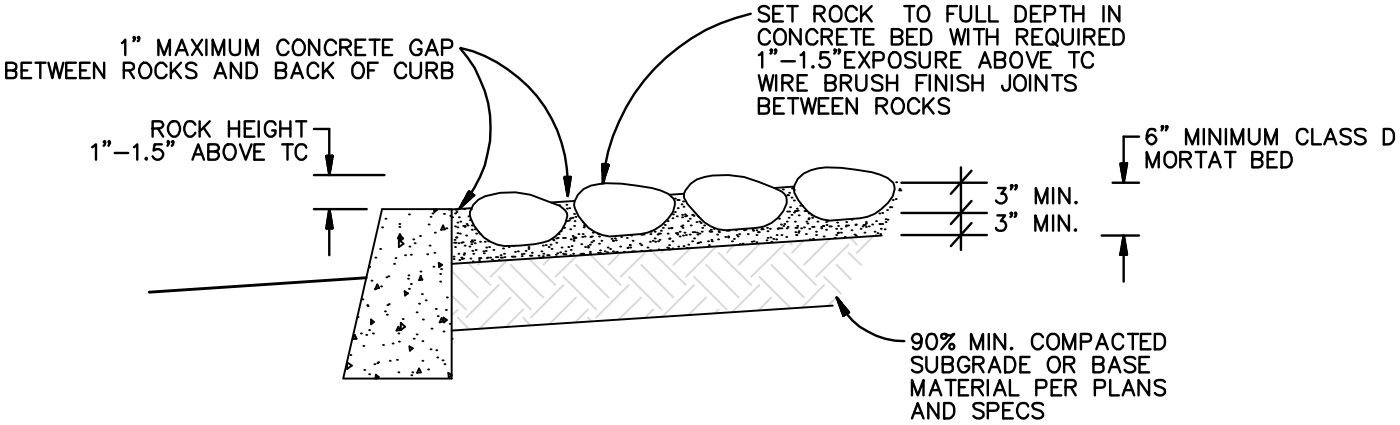

DETAIL 'A'

NOT TO SCALE
FOR ILLUSTRATIVE PURPOSES ONLY

NOT TO SCALE

APPROVED BY:

6/28/16

P.W. DIRECTOR/CITY ENGINEER DATE

REVISIONS			
DATE	BY	MARK	APPROVED

TYPICAL ROCK TREATMENT ASSEMBLY

CITY OF RIALTO, CALIFORNIA
PUBLIC WORKS DEPARTMENT
ENGINEERING DIVISION

STD NO. LMD–PLT–663 | SHT 1 OF 2

GENERAL NOTES:

1. ROCK SIZES UNLESS OTHERWISE SPECIFIED SHALL BE: COBBLESTONES: MAX. 12" TO MIN. 6" IN DIAMETER, NO MORE THAN 50% OF ANY ONE SIZE.
2. A SAMPLE AREA, MIN. 10 SQ. FT. SHALL BE APPROVED BY THE CITY OF RIALTO INSPECTOR PRIOR TO PROCEEDING WITH THE REMAINING ROCK WORK.
3. FINAL RESTING POSITION OF ALL ROCKS SHALL BE APPROVED BY THE CITY OF RIALTO INSPECTOR.
4. ROCKS SHALL BE SMOOTH, ROUNDED, FREE OF OBJECTIONABLE DISFIGURATIONS AND IRON CONTENT AS APPROVED BY THE CITY OF RIALTO INSPECTOR.
5. CONCRETE SHALL BE CLASS 520-C-2500, 4 INCH SLUMP CONCRETE.
6. WIRE BRUSH ALL JOINTS AFTER THE INSTALLATION OF THE ROCKS. AFTER CONCRETE HAS SET, CLEAN THE RESIDUE FROM SURFACES OF ROCKS.
7. NO JOINTS GREATER THAN 1" BETWEEN ROCKS WILL BE ACCEPTABLE. 4" FILLER ROCKS WILL BE ACCEPTED TO MAINTAIN THE 1" MAXIMUM JOINT.
8. WHERE ROCK BORDERS TURF AREA, PLACE 4" CONCRETE EDGE BETWEEN BACK OF ROCK AND TURF.

NOT TO SCALE

APPROVED BY:

6/28/16

P.W. DIRECTOR/CITY ENGINEER DATE

REVISIONS			
DATE	BY	MARK	APPROVED

TYPICAL ROCK TREATMENT ASSEMBLY

CITY OF RIALTO, CALIFORNIA
PUBLIC WORKS DEPARTMENT
ENGINEERING DIVISION

STD. NO. LMD-PLT-663 | SHT 2 OF 2

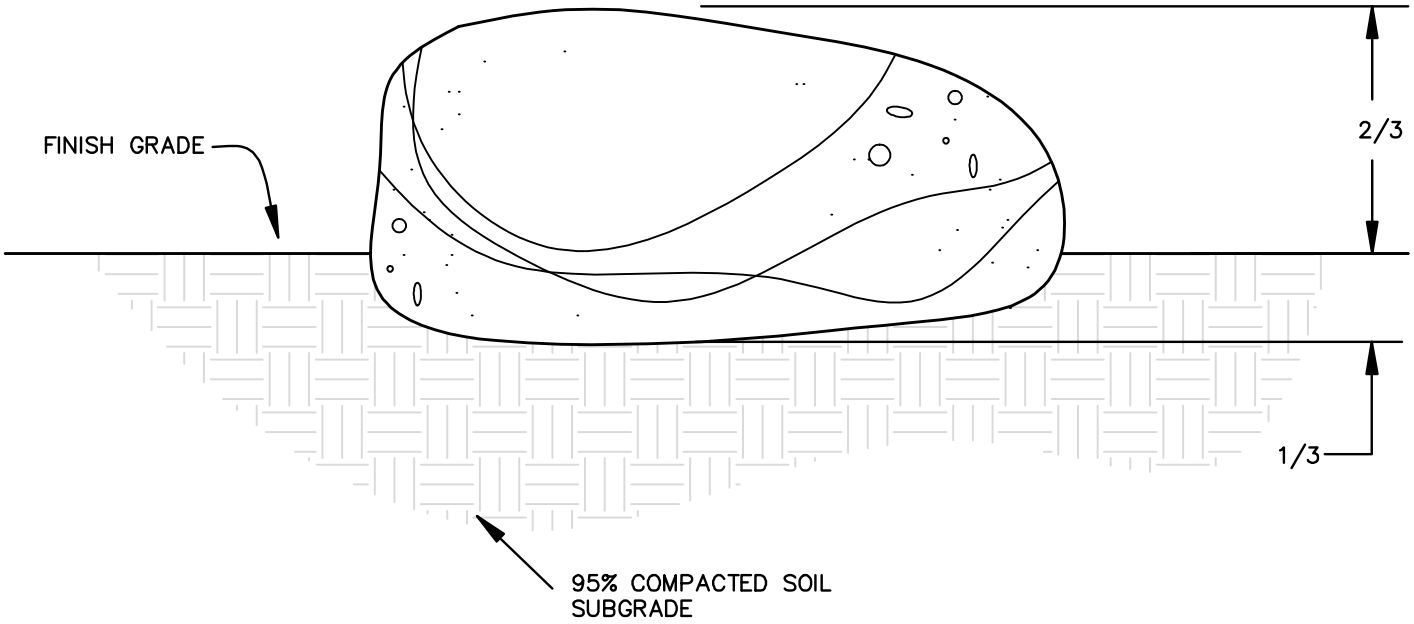

NOTES:

1. MINIMUM 1/3 BOULDER HEIGHT TO BE BURIED BELOW GRADE.
2. FINAL LOCATION OF BOULDERS SHALL BE DETERMINED BY THE CITY OF RIALTO.
3. RIVER ROCK BOULDERS SHALL BE A MINIMUM OF 24" TO 42" IN DIAMETER.
4. BOULDERS SHOULD NOT BE WITHIN 24" OF CURBS OR SIDEWALKS.

NOT TO SCALE

APPROVED BY:

6/28/16

P.W. DIRECTOR/CITY ENGINEER DATE

REVISIONS			
DATE	BY	MARK	APPROVED

BOULDER PLACEMENT

CITY OF RIALTO, CALIFORNIA
PUBLIC WORKS DEPARTMENT
ENGINEERING DIVISION

STD. NO. LMD-PLT-664 | SHT 1 OF 2

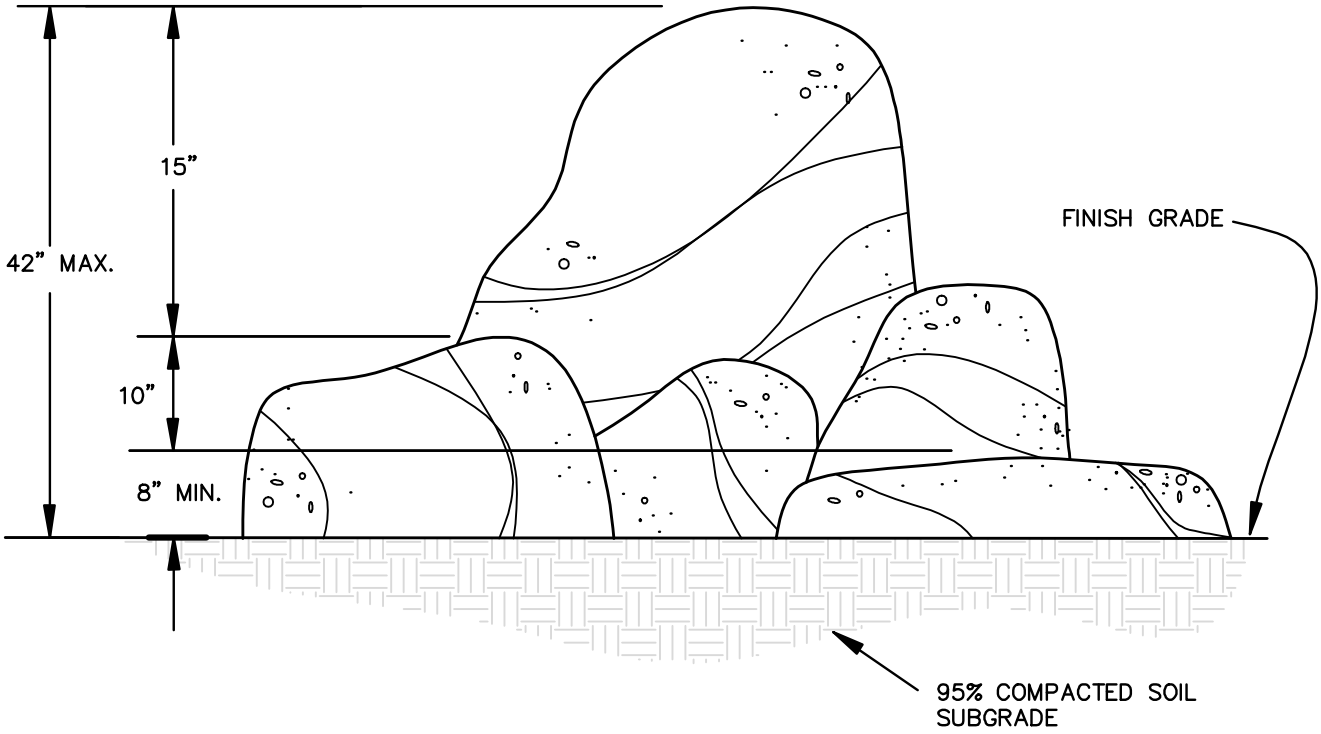

GOOD BOULDER PLACEMENT:

1. GROUP OF 3, 5, OR 7 BOULDERS. ONE LARGE, ONE OR TWO MEDIUM, AND ONE TO THREE SMALL BOULDERS.
2. LARGEST BOULDER SHOULD BE PLACED WITH AXIS VERTICAL (STANDING) OTHER SMALLER BOULDERS PLACED VERTICALLY SHOULD BE ARRANGED IN TIGHT CLUSTERS AROUND FRONT OF LARGEST BOULDER.
3. HORIZONTAL (LAYING) BOULDERS SHOULD BE SPREAD OUT SOMEWHAT.
4. BOULDERS SHOULD NOT BE WITHIN 24" OF CURBS OR SIDEWALKS.

NOT TO SCALE

APPROVED BY:

6/28/16

P.W. DIRECTOR/CITY ENGINEER DATE

REVISIONS

DATE	BY	MARK	APPROVED

BOULDER GROUPING

CITY OF RIALTO, CALIFORNIA
PUBLIC WORKS DEPARTMENT
ENGINEERING DIVISION

STD. NO. LMD-PLT-664 | SHT 2 OF 2

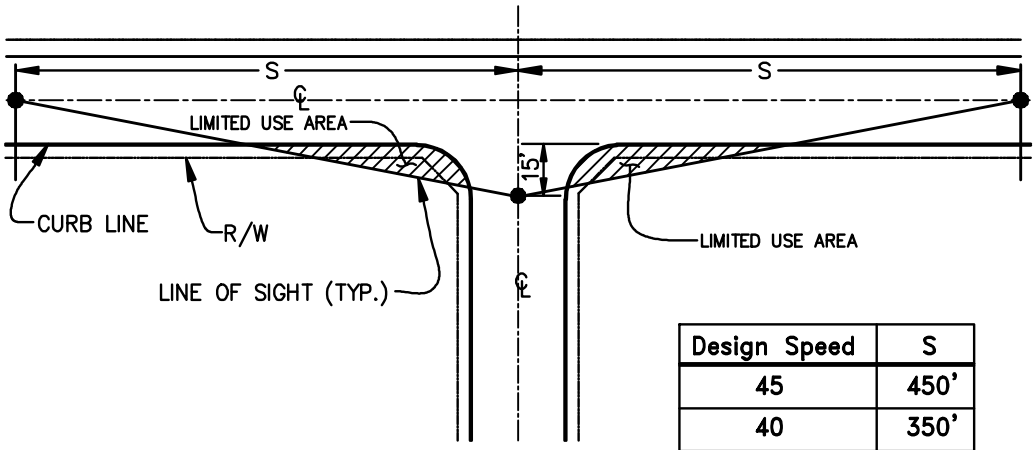

Design Speed	S
45	450'
40	350'
35	300'

GENERAL NOTES:

1. THE LIMITED USE AREA IS DETERMINED BY THE GRAPHICAL METHOD USING THE APPROPRIATE DISTANCE GIVEN IN THE ABOVE TABLE. IT SHALL BE USED FOR THE PURPOSE OF PROHIBITING OR CLEARING OBSTRUCTIONS IN ORDER TO MAINTAIN ADEQUATE SIGHT DISTANCE AT INTERSECTIONS.
2. THE LINE OF SIGHT SHALL BE SHOWN AT INTERSECTIONS ON ALL LANDSCAPING PLANS. IN CASES WHERE AN INTERSECTION IS QUESTIONABLE, REFER TO THE CIVIL ENGINEER FOR DIRECTION ON SIGHT LINES.
3. WALLS OR ANY OBSTRUCTIONS THAT COULD RESTRICT THE VIEW WITHIN THE LIMITED USE AREA WILL NOT BE PERMITTED.
4. SLOPED AREAS IN THE LIMITED USE AREA SHALL NOT EXCEED 3 FEET.
5. THE LIMITED USE AREA SHALL BE AS LEVEL AS POSSIBLE YET MAINTAIN PROPER DRAINAGE.
6. PLANTS AND SHRUBS SHALL BE OF THE TYPE THAT WILL GROW NO HIGHER THAN 30 INCHES ABOVE THE GROUND WITHIN THE LIMITED USE AREA.
7. THE LOCATION OF A DRIVER'S LINE OF SIGHT WHILE IN A VEHICLE AT AN INTERSECTION IS 15 FEET BACK FROM THE PROJECTION OF THE CURB LINE.
8. THE DISTANCE 'S' REPRESENTS THE SAFE STOPPING DISTANCE MEASURED ALONG THE CENTERLINE OF THE ROAD.

NOT TO SCALE

APPROVED BY:

6/28/16

P.W. DIRECTOR/CITY ENGINEER DATE

REVISIONS			
DATE	BY	MARK	APPROVED

SIGHT DISTANCE

CITY OF RIALTO, CALIFORNIA
PUBLIC WORKS DEPARTMENT
ENGINEERING DIVISION

STD. NO. LMD-PLT-665 | SHT 1 OF 1

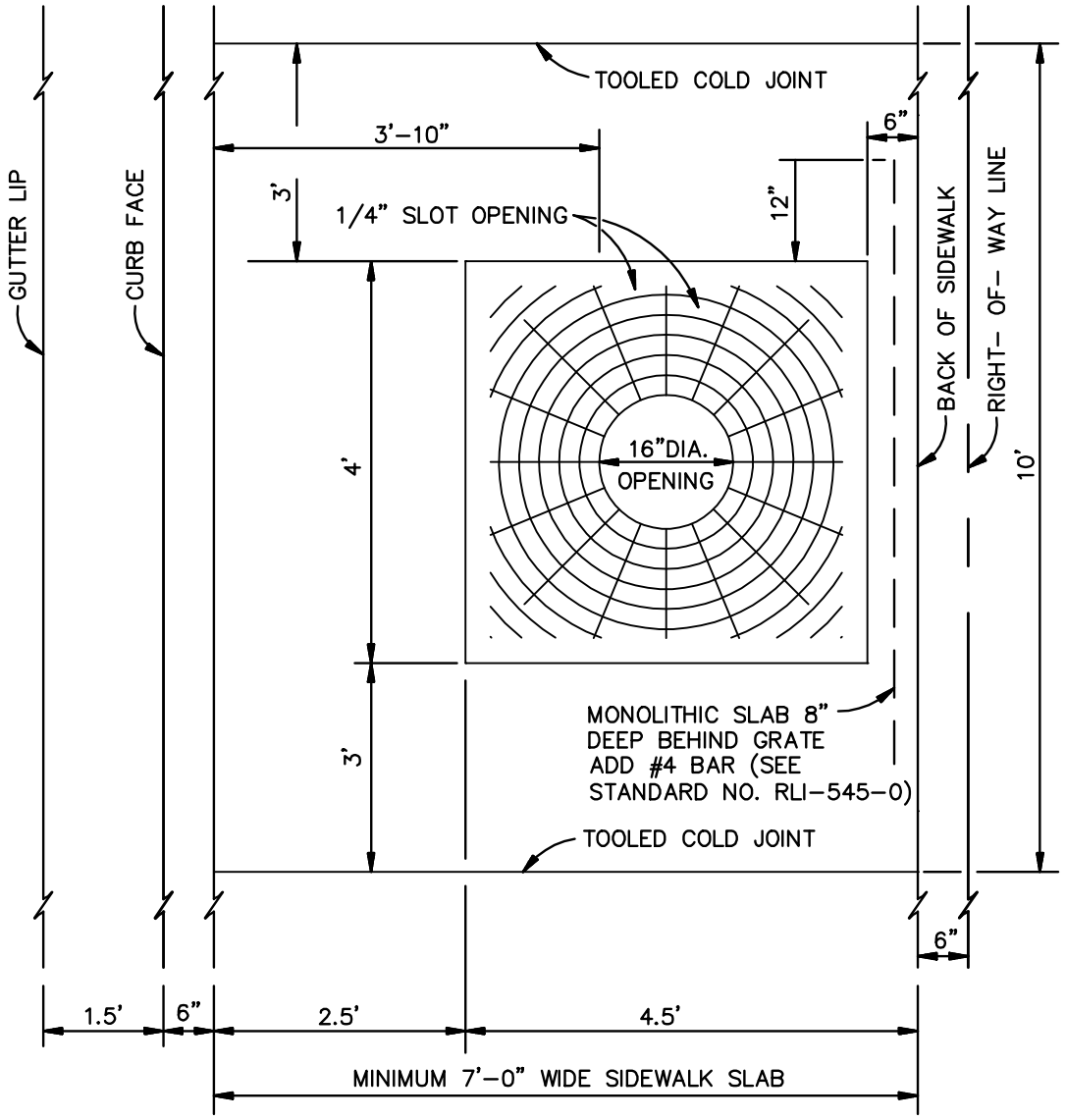

GENERAL NOTES:

1. INSTALL GRATE EQUAL DISTANCE FROM TOOLED COLD JOINT/EXPANSION JOINT.
2. THE STEEL GRATE TO BE CAST WITH 1/4" MAXIMUM SLOT OPENING.
3. ALL STEEL GRATE TO BE INSTALL WITH SQUARE STEEL ANGLE FRAME WITH (8) #4 REBAR CEMENT ANCHORS (WELDED TO FRAME) (1 3/4" X 1 3/4" X 1/4").

NOT TO SCALE

APPROVED BY:

P.W. DIRECTOR/CITY ENGINEER — DATE 6/28/16

REVISIONS			
DATE	BY	MARK	APPROVED

TREE GRATE LOCATIONS

CITY OF RIALTO, CALIFORNIA
PUBLIC WORKS DEPARTMENT
ENGINEERING DIVISION

STANDARD NO. PLT-550 | SHT 1 OF 3

2 ALTERNATIVE TREE/GRATE LOCATIONS FOR COMMERCIAL AREA PARKWAY SIDEWALKS

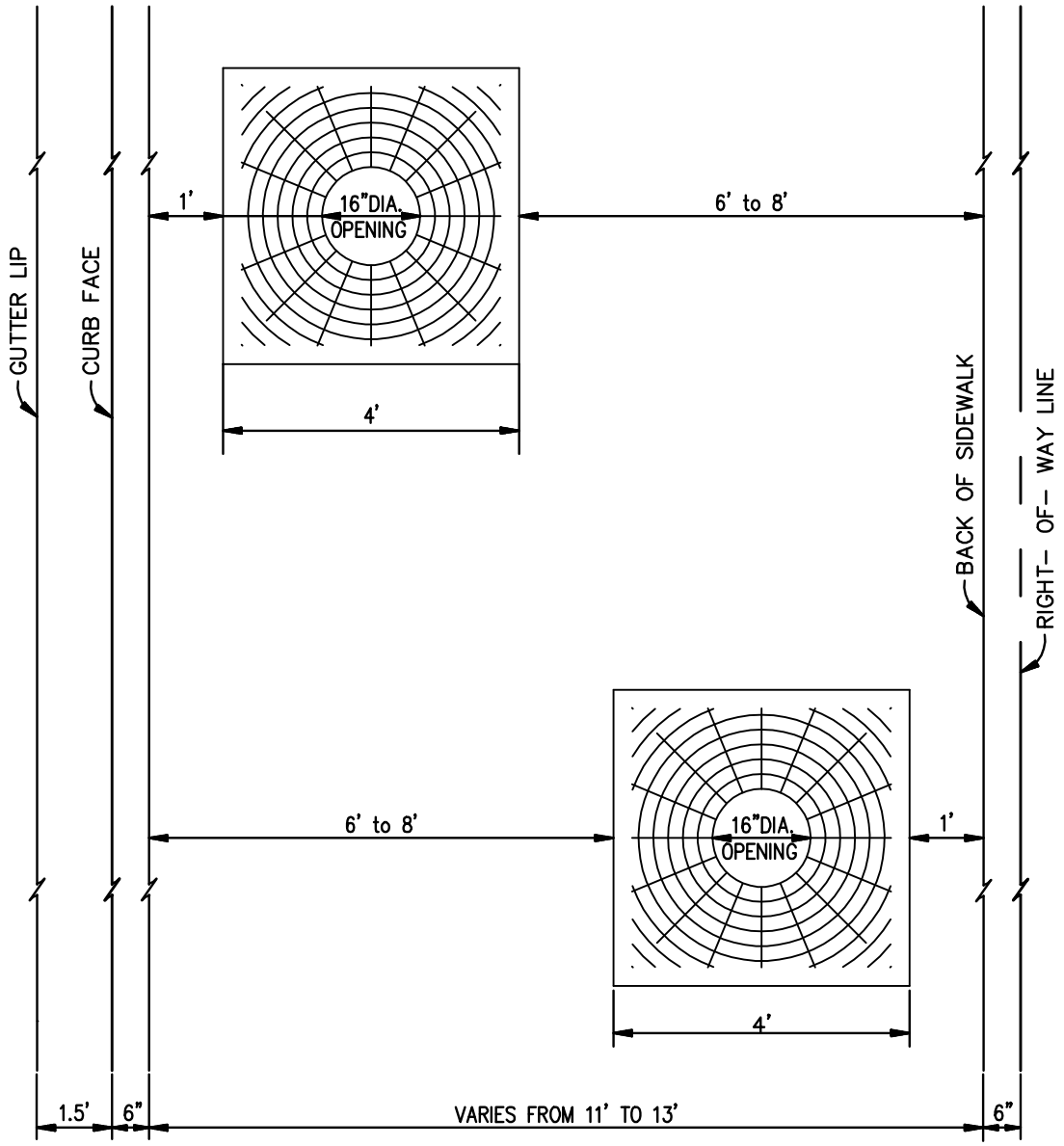

NOT TO SCALE

APPROVED BY:

6/28/16

P.W. DIRECTOR/CITY ENGINEER DATE

REVISIONS			
DATE	BY	MARK	APPROVED

TREE GRATE LOCATIONS

CITY OF RIALTO, CALIFORNIA
PUBLIC WORKS DEPARTMENT
ENGINEERING DIVISION

STANDARD NO. PLT-550 | SHT 2 OF 3

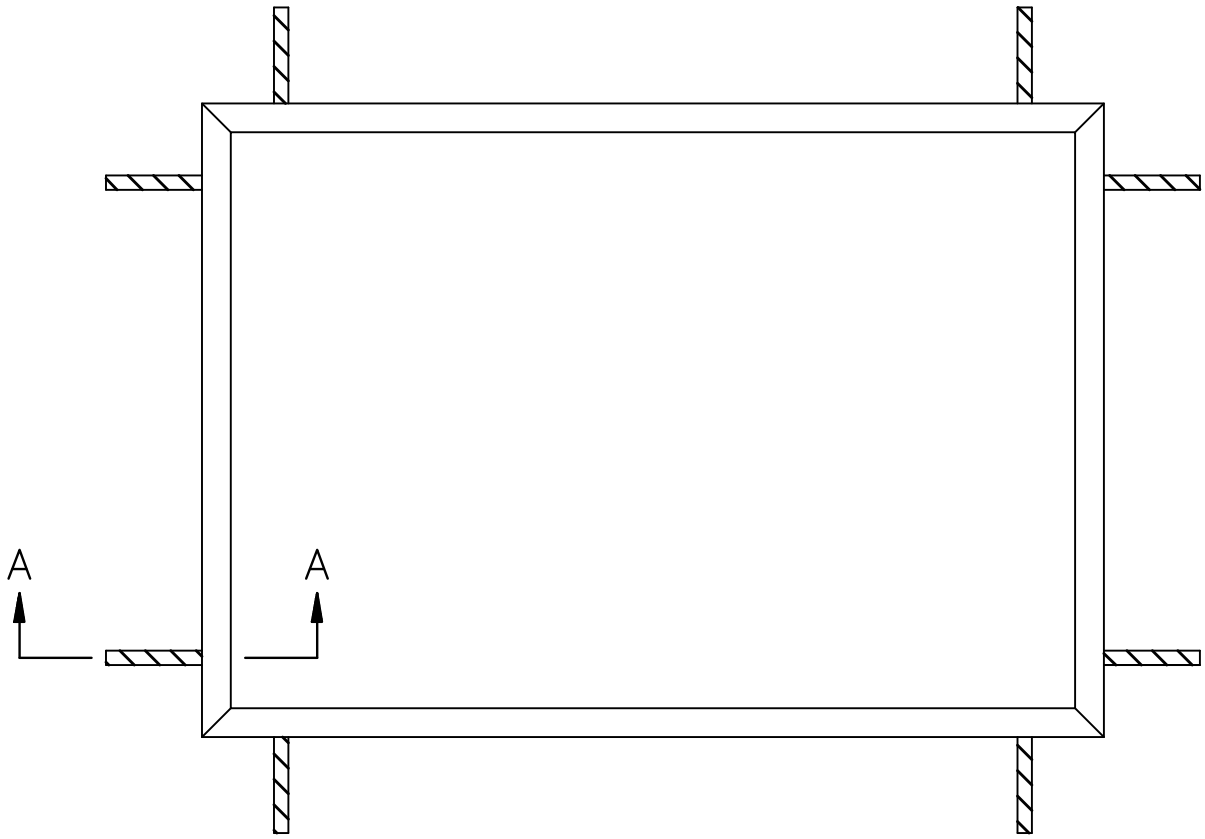

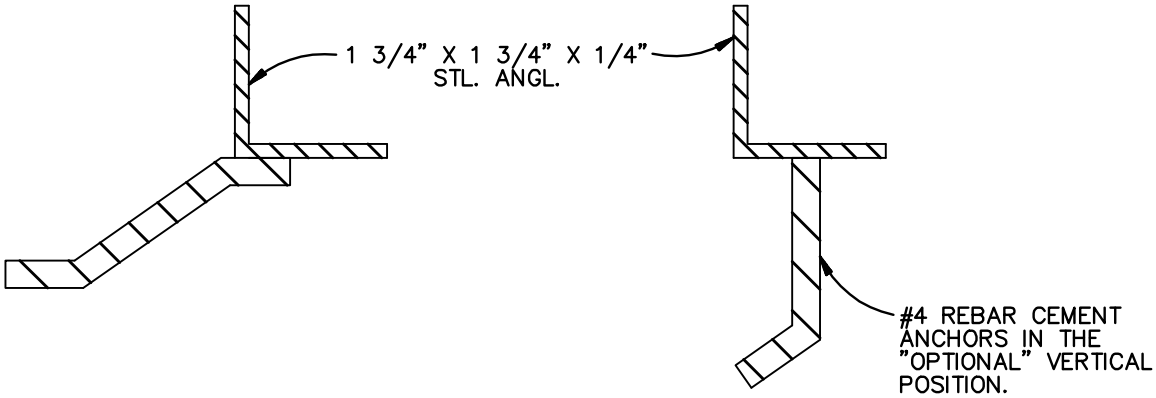

SECTION A-A

WITH #4 REBAR CEMENT
ANCHORS INSTALLED IN THE
"STANDARD" HORIZONTAL POSITION

NOT TO SCALE

APPROVED BY:

6/28/16

P.W. DIRECTOR/CITY ENGINEER DATE

REVISIONS			
DATE	BY	MARK	APPROVED

TREE GRATE LOCATIONS

CITY OF RIALTO, CALIFORNIA
PUBLIC WORKS DEPARTMENT
ENGINEERING DIVISION

STANDARD NO. PLT-550 | SHT 3 OF 3

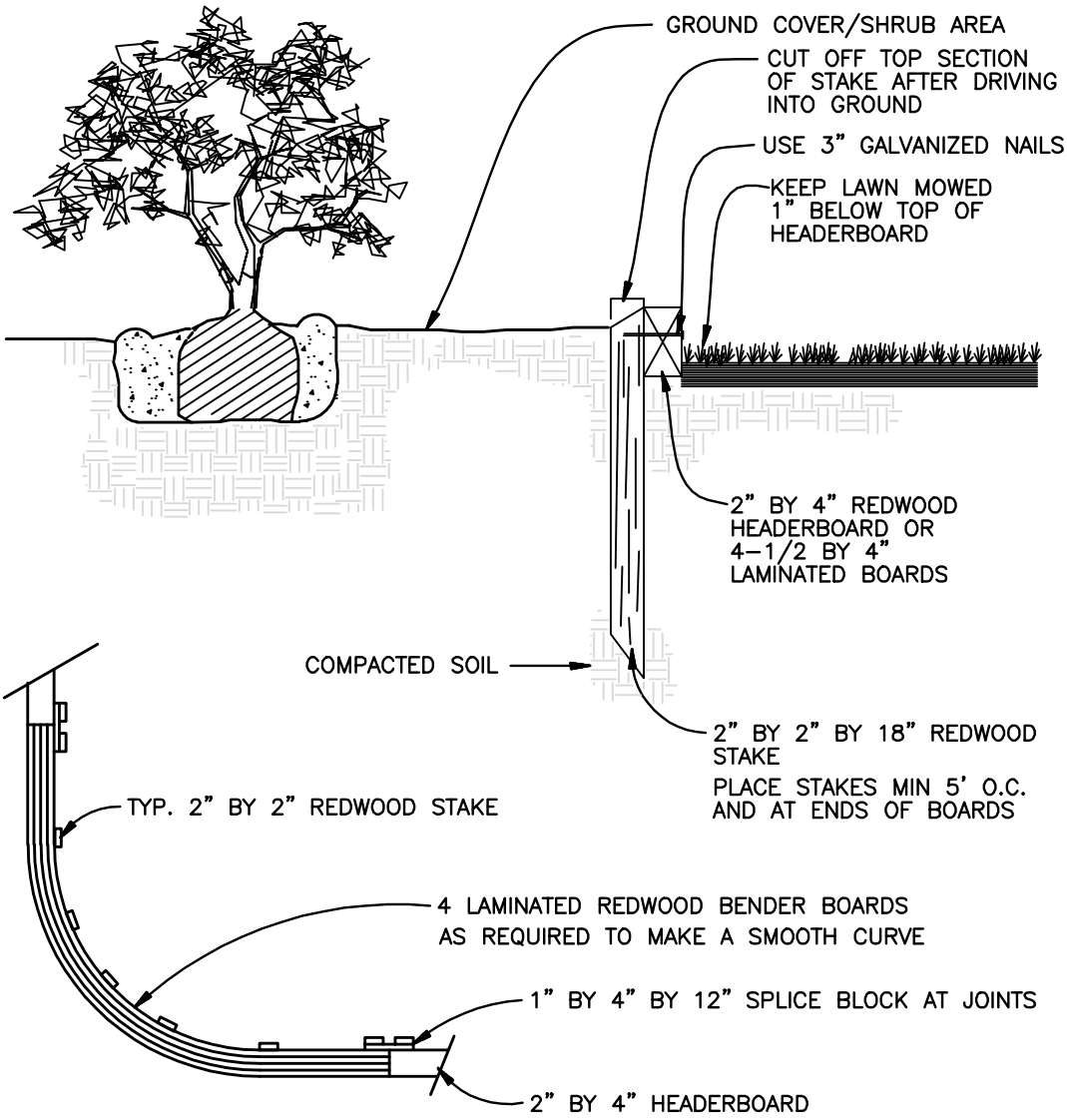

NOT TO SCALE

APPROVED BY:

6/28/16

P.W. DIRECTOR/CITY ENGINEER DATE

REDWOOD HEADERBOARD

REVISIONS

DATE	BY	MARK	APPROVED

CITY OF RIALTO, CALIFORNIA
PUBLIC WORKS DEPARTMENT
ENGINEERING DIVISION

STANDARD NO. PLT-551 | SHT 1 OF 1

CITY OF RIALTO

PUBLIC WORKS DEPARTMENT -MAINTENANCE DIVISION
150 S. PALM AVENUE RIALTO, CALIFORNIA 92376

LANDSCAPE MAINTENANCE DISTRICT

Guidelines and Specifications for Landscape Development

Landscape Architectural Development Plan Requirements

Irrigation, Planting and Maintenance Requirements

Revised January 2016

TABLE OF CONTENTS

GENERAL REQUIREMENTS **3**

GENERAL LANDSCAPE DEVELOPMENT GUIDELINES **5**

LANDSCAPE PLAN REQUIREMENTS **7**

GENERAL REQUIREMENTS 7

TITLE SHEET REQUIREMENTS 7

GRADING REQUIREMENTS 8

WALL AND FENCE REQUIREMENTS 9

RIVER ROCK COBBLE HARDSCAPE REQUIREMENTS 9

IRRIGATION PLAN REQUIREMENTS 9

PLANTING PLAN REQUIREMENTS 11

RIVER ROCK COBBLES AND RIVER ROCK BOULDERS **13**

GENERAL REQUIREMENTS 13

LANDSCAPE IRRIGATION SYSTEM **14**

SCOPE OF WORK-GENERAL 14

IRRIGATION EQUIPMENT 15

IRRIGATION INSTALLATION REQUIREMENTS 19

LANDSCAPE PLANTING **25**

GENERAL REQUIREMENTS 25

PLANTING REQUIREMENTS 27

MAINTENANCE REQUIREMENTS **30**

POST INSTALLATION REQUIREMENTS 30

FINAL ACCEPTANCE REQUIREMENTS 31

WATER EFFICIENT LANDSCAPE WORKSHEET **34**

APPROVED PLANT LIST **36**

PARKWAY TREES 36

SHRUBS 37

GROUNDCOVER 38

VINES 38

GENERAL REQUIREMENTS

1. It is the responsibility of the developer (seller) of the homes in the Landscape Maintenance District to inform the buyer that he/she is in an assessment district and is subject to a yearly assessment for Landscape Maintenance District maintenance.

2. The developer shall furnish 2 (two) sets of completed drawings, consisting of planting and irrigation plans, along with a set of details and specifications to the City of Rialto Public Works Department, for plan check prior to the beginning of construction. Construction may not begin until all landscape development plans have been approved.

3. The plans shall be prepared by a California State registered Landscape Architect. The seal and signature of the landscape architect must appear on all sheets.

4. Submitted drawings shall contain all planting, irrigation and hardscape work proposed for the annexed portion of the development.

5. Upon complete satisfaction of all requirements through the plan check process, the Landscape Architect shall submit 1 (one) final set of Mylar drawings to be approved and signed by an authorized City of Rialto representative.

6. The Developer/Landscape Architect shall refer to the City of Rialto Landscape Planting and Irrigation Plan Requirements, starting at page 7 for necessary criteria in drawing preparation.

7. Approval of Landscape Plans will be based on:

   a. Compliance with the Landscape Planting and Irrigation Plan Requirements, starting at page 7.

   b. Compatibility with other approved or installed developments in the area.

   c. Adequacy of ground preparation, specification of soil amendments and soil preparation according to soil report for the Landscape Maintenance District.

   d. Appropriateness of plant material based on appearance, size, spacing, hardiness, wind and drought tolerance and maintenance requirements. See reference list of acceptable plant material on page 36.

e. Plans conform to the requirements of the California Water Efficient Landscape Ordinance AB1881, including State Proclamations of Jan. 17, 2014 and April 25, 2014, as well as Executive orders B-26-14, B-28-14 and B-29-15.

8. The developer shall be responsible for the development's landscape installation per the approved plans, Landscape Maintenance District specifications and per recommendations of the City of Rialto representative. Developer shall be responsible for the proper installation of a water meter and edision meter dedicated specifically for the Landscape Maintenance District landscape and irrigation areas. All work shall be accomplished in a professional manner.

9. The developer shall maintain the developed parkway, setback areas and medians (if applicable) and pay all costs associated with that maintenance for a period of 1 (one) year. After 1 (one) year, the improvements must be inspected and approved by the City of Rialto. When all conditions for approval are met, the City of Rialto will take over maintenance.

10. The developer shall provide a performance and maintenance bond for the landscape improvements at the time of annexation into the Landscape Maintenance District. The amount of the bond will be calculated at the current rate of construction costs.

GENERAL LANDSCAPE DEVELOPMENT GUIDELINES

A. All landscape plans shall callout existing and proposed construction/landscape materials, including trees, paving, walls, streetlights, pull boxes, etc.

B. All landscape plans shall incorporate drought tolerant plant material. A minimum of 60% (sixty percent) of plants shall be low water users as identified by WUCOLS (Water Use Classifications of Landscape Species). Refer to the Inland Empire Garden Friendly Plant List (***http://garden.csusb.edu/documents/PlantBooklet_IEGF.pdf***) and approved plant list on page 36.

C. Slopes greater than 3:1 (three to one) must be planted with low maintenance ground cover at 100% (one hundred percent) coverage within one year.

D. Trees should be planted so as not to create long range maintenance problems. See accepted list of street trees on page 36 and parkway width requirements, Item G below.

E. All trees shall have an arbor guard to protect tree base.

F. Tree varieties shall be consistent with existing street tree varieties. No abrupt changes in street trees will be accepted.

G. No landscaped areas shall have a dimension of less than 3' (three feet) across or an area of less than 20 (twenty) square feet.

H. The use of mulch, redwood shavings, natural mulch, etc., is required under shrubs and ground cover at a 3" (three inches) depth for weed control.

I. A minimum of 50% (fifty percent) of the trees shall be canopy shade trees.

J. All parkway areas not devoted to sidewalk shall be landscaped and permanently maintained.

K. Developer shall plant a minimum of 1 (one) tree per 30' (thirty feet) of street frontage.

L. A minimum of 30% (thirty percent) of total Landscape Maintenance District landscape area must be incorporated as River Rock Cobble hardscape. A

minimum of 20% (twenty percent) of total Landscape Maintenance District landscape area must be incorporated as decomposed granite or other permeable hardscape as approved by the City of Rialto.

M. Mowstrips shall be 6" X 6" (six inches by six inches) concrete barrier and be located at limits of project and in between Landscape Maintenance District landscape areas and on-site landscape areas.

N. Lawn areas are NOT allowed in the Landscape Maintenance District.

O. Rotator Heads are not allowed within 24" (twenty-four inches) of hardscape or non-permeable surfaces. Standard spray irrigation heads are prohibited in the City of Rialto.

P. All above ground pipes shall be brass.

LANDSCAPE PLAN REQUIREMENTS

GENERAL REQUIREMENTS

A. All landscape drawings shall be 24" x 36" (twenty-four inches by thirty-six inches) or “Arch D” in size.

B. Plans are to be complete in all phases of design including details and specifications.

C. All sheets are to be numbered consecutively.

D. North arrow to be shown on each sheet (except detail and specification sheets).

E. Landscape architect's firm name, address, telephone number, date plans are prepared, signature and professional seal including expiration date are required on all sheets.

F. Scale should be clearly indicted on each sheet. 1"=20' (one inch equals twenty feet) maximum is required.

G. Match lines shall be clearly shown and labeled on each sheet.

H. Area measurements for slope, cobblestone paving, sidewalk, non-permeable and permeable hardscape, decomposed granite (or other approved covering) and ground cover in developments shall be noted. These shall be listed with the total square footage amounts for each as well as a total landscape area square footage for project.

TITLE SHEET REQUIREMENTS

The Title sheet shall have the following information clearly shown:

A. The Project name, address, and Annexation number.

B. The Developer's name, address and telephone number.

C. The Landscape Architect's seal and signature.

D. A Vicinity map showing site location with relationship to major streets and landmarks.

E. A Site Map clearly showing site location and project limits, with street names labeled within project as well as those streets directly adjacent to the project. Adjacent property use shall be shown.

F. A Sheet index.

G. General notes. Include reference note as follows:

> "All work conforms to City of Rialto Landscape Guidelines and Specifications and the California Water Efficient Landscape Ordinance AB1881. I have complied with the criteria of the ordinance and applied them accordingly for the efficient use of water in the irrigation design plan."

H. Soil management note to be included as follows:

> "Contractor shall obtain soils tests covering all planting areas after completion of finish grading and prior to start of soil preparation work. Tests shall be performed by an approved California agronomic soils testing laboratory and shall include a fertility and suitability analysis with written recommendations for soil preparation and planting backfill mix. The amendments in these specifications are the minimum requirement and are for bid purposes. All soil conditioning and amendments shall be per the final soil report recommendations. The minimum amendment and fertilizer application rates as specified in soils report apply only when they exceed the specified minimums per original plan.
>
> The soil management report shall be made available to the City Landscape Inspector or inspector designated by the City Engineer and to the landscape contractor prior to the installation of any plant material."

I. Reproduce "Final Acceptance Requirements." See page 31.

GRADING REQUIREMENTS

A. Maximum Design Grades.

1) 2:1 (two to one) for Ground cover areas.

B. Existing and proposed grades must be indicated with contour lines. Spot elevations must be shown on plans.

C. Parkway and common area drainage is not allowed to drain onto private property.

D. All planting areas must be clearly indicated showing top, toe and direction of slope.

WALL AND FENCE REQUIREMENTS

Indicate on both irrigation and planting plans all block walls and fences to be installed by the developer. Show all existing block walls and fences in addition to the new and proposed. All must be called out and labeled clearly.

RIVER ROCK COBBLE HARDSCAPE REQUIREMENTS

A minimum of 30% (thirty percent) of total Landscape Maintenance District landscape area must be incorporated as River Rock Cobble Hardscape (excluding sidewalk areas). A minimum of 20% (twenty percent) of total Landscape Maintenance District landscape area must be incorporated as decomposed granite or other permeable hardscape as approved by the City of Rialto. Contact Landscape Contract Administrator at City of Rialto Public Works Department, Maintenance Division, (telephone (909) 820-2602) for verification of areas which must be in accordance with this requirement.

IRRIGATION PLAN REQUIREMENTS

A. Only automatic irrigation systems are acceptable within public right of way.

B. Backflow preventer assemblies must have a line sized WYE strainer included.

C. Location must be clearly indicated for the water meter, P.O.C. (point of connection), automatic controller and electrical P.O.C. City of Rialto requires a separate water meter and Edison meter specifically for use only with the

Landscape Maintenance District landscape and irrigation areas. The developer is responsible for all costs and improvements required for their installation.

D. The following information is required for each P.O.C. and must be clearly shown:

1) City/Water district central project mainline.
2) Static and residual water pressure in P.S.I.
3) Meter size
4) Peak irrigation demand in G.P.M.
5) Maximum G.P.M. for each valve
6) Indicate on drawings the water department that the P.S.I. information was received from including water department name, phone number, who gave the information, date received and P.S.I. given for area.

E. Label each system at valve with a callout indicating the following:

1) Valve number
2) G.P.M. requirement
3) Valve size

F. Check valves shall be used to prevent low head drainage for elevation changes of more than 4' (four feet) in height within a system.

G. Install gate valves/ball valves to isolate irrigation supply lines at driveways and at appropriate intersections in the system.

H. Slope systems must have separate valves for the top and bottom of slope.

I. The irrigation legend must list the following items:

1) Symbol of equipment
2) Manufacturer and model number
3) Description of equipment
4) Operating P.S.I.
5) G.P.M.
6) Radius and pattern of spray heads
7) Precipitation rates of spray heads

J. All pop-up heads are required to be installed on triple swing joints.

K. Rotator heads for shrub and groundcover area shall be 12" (twelve inch) pop-ups. Rotator heads are not allowed within 24" (twenty-four inches) of hardscape or non-permeable surfaces.

L. All trees to receive deep root watering irrigation. Trees shall be valved separate from all other planting.

M. Quick couplers shall be installed at a maximum of 200' O.C. (two hundred feet on center) spacing. They shall be equipped with locking vinyl covers and shall be placed inside valve box.

N. All automatic controller(s) shall be installed in a lockable vandal resistant enclosure with final approval by the City of Rialto Representative.

O. Water Efficient Landscape Work Sheet shall be included on plans. See page 34 for example of work sheet. Plans must include Maximum Applied Water Allowance (MAWA) and Estimated Total Water Use (ETWU).

P. Irrigation schedule must be included in plans. Schedule should include establishment period, minimum of 6 (six) months, and established period based on a winter/spring/summer schedule. Schedules shown should include watering days per week and minutes per day.

PLANTING PLAN REQUIREMENTS

A. The minimum acceptable size for parkway/street trees is 24" (twenty-four inch) box.

B. The street trees must be selected from the Approved Designated Street Tree List per the City of Rialto with selection consideration given to the surrounding tracts. See page 36.

C. The street tree planting requirements are as follows:

One tree must be planted per 30 (thirty) linear feet of annexed street frontage within the maintenance area. Additional trees may be required per developer/City of Rialto representative agreement.

D. All plant material must be compatible in respect to water requirements.

E. Plant legend shall indicate all materials specified. It shall also include:

1) Symbol
2) Botanical and common name, with variety shown, if applicable.
3) Quantity
4) Size, width and height (at maturity)
5) Water usage per WUCOLS

F. Total plant quantities shall be shown for each species on the plant legend.

G. Indicate and show on legend, seed type and quantity in pounds per I (one) acre (Lbs/acre) for hydroseed mixes.

H. Indicated slurry components and fertilizer in lbs per I (one) acre (Lbs/acre) for hydroseed mixes.

I. The following note shall be added to the planting plan:

> "Note: Substitutions, including varieties, will NOT be made without written approval from the City of Rialto."

J. Concrete mowstrips will be placed at the limits of the project and between Landscape Maintenance District landscape and on-site landscape areas.

K. 3" (three inches) of organic mulch shall be placed in all planting areas. Mulch to be medium to heavy grind and wind resistant.

L. Sight lines should be shown at all street intersections and parking lot exits within the project. Refer to the City of Rialto Sight Line standard detail for more information on sight line locations.

RIVER ROCK COBBLES AND RIVER ROCK BOULDERS

GENERAL REQUIREMENTS

A. Maximum design grades for all rockwork to be 3:1 (three to one).

B. River rock boulders shall be placed in planting area a minimum of 24" (twenty-four inches) from sidewalk.

C. Plan must include installation detailing, procedure and earth beam (side view plan).

D. All river rock materials shall be natural river wash materials of granite. All rocks are to be round and smooth.

E. All river rock cobbles shall be a minimum of 6" (six inches) to 12" (twelve inches) in diameter with no more than 50% (fifty percent) of any one size. River rock cobbles are to be hand placed with flattest side up to form a uniform surface without significant exposed or jagged edge. 80% (eighty percent) of the rock mass is to be below grade. All river rock cobbles must be embedded in class D Mortar with minimum 3" (three inches) base below rock.

F. River Rock Boulders shall be a minimum of 24"' (twenty-four inches) to 42" (forty-two inches) in diameter. Boulders shall be placed with 1/3 (one third) of rock mass below grade.

G. Boulders shall be firmly fixed in the established soil base with 95% (ninety-five percent) compaction.

H. All boulders and River Rock materials shall be inspected by the City of Rialto prior to installation.

I. Boulder locations must be indicated on landscape plan.

LANDSCAPE IRRIGATION SYSTEM

SCOPE OF WORK-GENERAL

A. The irrigation system shall efficiently and uniformly irrigate all areas, shall be complete in every respect, and shall be operating to the satisfaction of the City of Rialto.

B. All irrigation valve(s) shall be installed in approved valve boxes and shall be located within planted areas only and centered in line it serves.

C. Fixed riser irrigation heads shall not be used adjacent to walkways, curbs or any other pedestrian paths throughout landscaping.

D. Rotator heads are not allowed with in 24" (twenty-four inches) of hardscape or non-permeable surface.

E. All trees shall receive deep root watering. Trees shall be isolated on a valve separate from all other planting.

F. Irrigation design shall insure 100% (one hundred percent) head to head coverage for all planted areas utilizing spray irrigation. As planter width permits, spray heads shall be located on both sides of planting in a triangular spaced pattern.

G. All irrigation plans shall incorporate water efficient equipment. Landscape architect and/or irrigation consultant shall include a winter/spring/summer controller program as well as an establishment period program for review by the City of Rialto.

H. Verify that irrigation systems must be installed in strict accordance with all pertinent codes and regulations, the original design, the referenced standards and the manufacturer's recommendations. In the event any equipment or methods indicated on the drawings or in the specifications installation if this notification is not provided, the contractor shall assume full responsibility for the cost of all revisions necessary to comply with code. The contractor shall maintain a copy of approved plans on site at all times.

I. Upon completion of work, as-built drawings and information shall be transferred to reproducible Mylar drawings, and turned over to the City of Rialto as the record set for the project. The changes and dimensions shall be recorded in a clear, concise and legible manner to the satisfaction of the City of Rialto Representative.

IRRIGATION EQUIPMENT

A. Pipe

1) All Polyvinyl chloride (PVC) pipe shall be injection molded, rigid, un-plasticized PVC, NSF approved, of high tensile and impact strength, chemical resistant, type I, grade 1-200 PSI hydrostatic stress design. (PVC 1120).

2) Non-pressure lateral line pipe shall be PVC 1120/1220, class 200 or better with manufacturer specified pipe stabilizers.

3) Non-pressure lateral line on-grade pipe shall be UVR-PVC Brown line class 200 or better, approved type only.

4) Pressure main line pipe 2" (two inches) and larger shall be PVC 1120 class 315 with solvent weld joints approved type only.

5) Pressure pipe under 2" (two inches) shall be PVC 1120, schedule 40.

6) Riser and triple swing joint assemblies shall be made of PVC schedule 40 fittings and PVC schedule 80 nipples.

B. Control Wire

Control wire between the automatic controller and the solenoid activated remote control valves shall be direct burial copper wire, #12 AWG, type V.F., 600 volt. An extra wire shall be run between controller and valves with a 24" loop at each valve box. Extra wire shall be a different color from active controller wire.

C. Conduit/Sleeve

1) Conduit is required for any control wire crossing under any paved surface, separate from any irrigation sleeve. The conduit shall be PVC schedule 40 pipe, 1" (one inch) minimum size.

2) Sleeve for irrigation lateral and/or main lines is required for any pipe crossing under any paved surface. The sleeve shall be PVC schedule 40 pipe, sized 2½ (two and a half) times larger than the pipe running through it at a minimum depth of 24" (twenty-four inches) below paved surface.

D. Valve Boxes

Valve boxes shall be used to enclose all gate/ball valves, automatic remote control valves and quick couplers. One box shall be used per valve. The valve box shall be a plastic valve box measuring 14" (fourteen inches) X 19" (nineteen

inches) X 12" (twelve inches) minimum in size with snap-lock tab cover. In the case that a single valve with all its components does not fit in a standard valve box, a jumbo valve box shall be used. If necessary, two valve boxes may be used to enclose all valve components. Individual gate/ball valves and quick couplers may be placed in a round valve box a minimum of 10" (ten inches) in diameter. Covers shall be permanently branded for identification. Identification to be as follows:

Valve box - RCV and station number on the cover
Quick coupler box – QC on the cover
Gate valve box – GV on the cover

E. Master Valve

Master valves are to be brass valves in a normally open state. Master valves should be located as close to the P.O.C. as possible and enclosed in a valve box permanently branded for identification as Master Valve.

F. Flow Sensors

Flow sensors are to be Calsense Flow Meters. All flow sensors are to be brass and sized as necessary to accommodate the lowest gpm in the design. Flow sensors shall be enclosed in a valve box permanently branded for identification as Flow Sensor.

G. Remote Control Valves

1) Valves to be Rain-Bird brass valves.

2) All valves shall have capability to automatically close in the event of power failure or breakage of control wires.

3) All automatic valves must have an external manual bleed control to insure manual operation at all times.

4) All valves specified shall close against flow without chatter and with minimum closing surge pressure, minimum 5 (five) seconds closing time per valve.

5) All valves shall be completely serviceable in the field without removing the valve body from the main line.

6) A gate/ball valve shall be installed on each valve on upstream side to make valve easily serviceable.

7) Valves are to be installed in valve boxes. One valve per valve box. If valve with all its components does not fit in a standard valve box, a jumbo valve box

shall be used. If necessary, two valve boxes may be used to enclose all valve components. Valve number to be etched/branded in lid.

H. Gate Valves/Ball Valves

1) Gate valves shall be sized in accordance with the main line

2) Gate valves specified shall be of brass construction.

3) Gate valves shall be installed in valve boxes throughout the system at driveways and appropriate intersections in the system.

4) Individual gate valves are to be installed in a separate 10" (ten inches) minimum round valve box with the identification etched/branded in lid.

I. Quick Coupling Valves

1) All quick couplers shall be equipped with a locking vinyl cover and shall be installed in a separate 10" (ten inches) minimum round valve box from any remote control valve. Valve box to have identification etched/branded in lid.

2) Quick coupler assemblies shall be brass to the connection at the mainline. No galvanized pipe shall be used.

J. Irrigation Heads

1) All pop-up rotator heads shall be fully adjustable, vandal resistant (industry standard), include an internal pressure regulating device (PRS), and be of plastic molded construction, designed for use on a triple swing joint.

2) Check valves are required to prevent low head drainage at elevation changes of more than 4' (four feet) in height within a system.

3) No pop-up rotator heads are to be installed within 24" (twenty-four inches) of any hardscape or non-permeable surface.

4) Standard spray irrigation heads are prohibited in the City of Rialto.

K. Tree Irrigation

1) All trees shall be irrigated with the use of deep root watering system. Bubbler shall be installed on a PVC schedule 80 riser within the deep root watering sleeve extended from a triple swing joint on the outside of sleeve. A minimum of 2 (two) bubblers to be installed per tree.

2) Deep root watering system to be a minimum of 4" (four inches) in diameter and 36" (thirty-six inches) deep.

L. Drip Irrigation

1) Ground cover areas which utilize drip irrigation should use NETAFIM inline subsurface drip line. Maximum spacing of 12" (twelve inches) to 18" (eighteen inches) on center, depending on soil type. Drip line should not be valved with any other irrigation. Follow manufacturer's recommendations for maximum run lengths.

2) NETAFIM inline subsurface drip is to be buried 2" (two inches) below finish grade unless it is to be covered by a minimum of 3" (three inches) of mulch or other permeable surface.

3) Shrub emitters shall be installed on polyflex risers. Emitters shall be pressure compensating type and be clearly labeled with the GPH (gallons per hour) on the emitter.

M. Backflow Prevention Units

1) Backflow devices must be reduced pressure double check valves, FEBCO 825Y or approved equal.

2) Verify these units prior to installation with the water department that has jurisdiction over the tract being installed.

3) Gate valves are required on the backflow device assembly.

4) A line size WYE strainer is required on the backflow device assembly.

5) Brass pipe is required on all above ground installation.

N. Automatic Irrigation Controller

1) Automatic irrigation controller shall be a CALSENSE model ET2000e with flow meter and ETG sensor. Controller model to be determined by a representative of CALSENSE. Contact Bob Moxley at (760) 580-9428 or email to bobm@calsense.com for controller part number. Each controller must be called out with order number received from Bob Moxley. Include Bob Moxley's contact information in legend.

2) The Automatic controller shall be electrical with solid state construction, capable of automatic and manual operation.

3) The automatic controller shall allow timing of its stations to be independent of each other and shall be adjustable from I (one) to 60 (sixty) minutes per station.

4) Controller enclosure shall be a stainless steel pedestal mount cabinet by Le Meur; manufactured by Le Meur Welding and Manufacturing or as called out on plans.

5) Outside Antenna and Line Kit shall be compatible with CALSENSE. All exposed wiring shall be housed in galvanized conduit.

6) Electrical power for the controller shall be provided by the contractor via a meter box per Southern California Edison. It is the contractor's responsibility to provide electrical meter box for controller.

IRRIGATION INSTALLATION REQUIREMENTS

A. Trenching

1) All irrigation non-pressure PVC lateral lines shall be trenched to a minimum depth of 12" (twelve inches), from finish grade to the top of the pipe.

2) All subsurface drip line shall be buried to a depth of 2" (two inches) below finish grade unless it is to be covered by a minimum of 3" (three inches) of mulch or other permeable surface.

3) All irrigation pressure main lines shall be trenched to a minimum depth of 18" (eighteen inches), from finish grade to the top of the pipe.

4) All trenches shall be free of rocks, clods and sharp foreign material.

5) All trenches shall have a minimum of 3" (three inches) of sand below, above and around all main lines. The remainder of the trench shall be backfilled with clean, friable native soil screened to 1" (one inch) minus. The soil that is backfilled into the trenches shall be compacted to 90% (ninety percent) relative compaction.

B. Sleeving

1) All piping under pavement shall be in a schedule 40 PVC sleeve. Main line, lateral line and control wire shall all be in separate sleeves.

2) All irrigation sleeving shall be trenched to a minimum depth of 24" (twenty-four inches), from finish grade to the top of pipe. Sleeving under road ways and commercial traffic ways to be a minimum depth of 36" (thirty-six inches) from finish grade to the top of pipe.

3) All sleeving trenches shall have a minimum of 3" (three inches) of sand below and 6" (six inches) above all sleeves. The remainder of the trench shall be backfilled with clean, friable native soil screened to 1" (one inch) minus. The soil that is backfilled into the trenches shall be compacted to 90% (ninety percent) relative compaction.

4) Lateral line and mainline shall be sleeved in pipe 2½ (two and a half) times larger than the pipe running through it.

5) Under no circumstance should two pipes be placed in the same sleeve.

6) Irrigation pipe and electrical should not be placed in the same sleeve.

7) Conduit (sleeve) for control wire shall be 1" (one inch) minimum.

C. Pipe

1) No multiple assemblies on plastic lines shall be installed. Provide each assembly with its own outlet.

2) No pipe shall be installed parallel to and directly above another line. However, lateral lines may lie next to each other within the same trench unless this creates a maintenance problem. Trenches for plastic pipe shall provide minimum earth coverage of 12" (twelve inches) over all lateral piping to pop-up type spray heads.

D. Control Wire

1) Control wires shall occupy the same trench as the irrigation main line when possible, bundled and secured at 10' (ten foot) intervals with plastic electrical tape.

2) Control wire shall be installed in conduit under all pavement (See Sleeving, this section).

3) The control wire shall be continuous from controller to remote control valve and with no splices or connections except at valves and the controller.

4) A 24" (twenty-four inch) expansion curl of control wire shall be in each valve box and for each valve.

5) Approved waterproof connectors must be used for all splices.

6) An extra wire shall be run from the controller to each valve box with a 24" (twenty-four inch) expansion curl in each box. Wires shall be run parallel to

the controller wire in each direction from the valve box. Extra wire shall be a different color from the common wire used for easy identification.

E. Valve Boxes

1) Each remote control valve, gate/ball valve and quick coupler shall be installed in a valve box.

2) The valve boxes shall be set flush with finish grade with a minimum dimension of 6" (six inches) clear from walks and all other permanent structures. The valve box shall be set to a sufficient depth to provide clearance between the cover and the valve.

3) Each valve box lid shall be permanently branded for identification. Identification to be as follows:

   Valve box - RCV and station number on the cover
   Quick coupler box – QC on the cover
   Gate valve box – GV on the cover

F. Remote Control Valves

1) Irrigation systems shall have trees systems valved on separate valves from shrub and ground cover systems.

2) The top and toe of the slope shall be valved with separate valves.

3) No irrigation valve shall be located within any concrete area. All valves shall be located in the planting area and have a minimum of 6" (six inches) clearance from walks and all other permanent structures.

G. Master Valves/Flow Meter

1) Master valves shall be located as close to the P.O.C. as possible but after the backflow assembly. The flow meter shall be located downstream from the master valve and there should be no other components between the two.

2) Master valve and flow meter shall be installed each in a separate valve box within landscaped areas only. The valve box shall have a minimum of 6" (six inches) clearance from walks and all other permanent structures.

H. Gate Valves/Ball Valves

1) Gate valves shall be installed at driveways and appropriate intersections in the irrigation system to isolate sections for maintenance and repair.

2) Gate valves shall be installed in a 10" (ten inches) in diameter minimum round valve box within landscaped areas only. The box shall have a minimum of 6" (six inches) clearance from walks and all other permanent structures.

I. Quick Coupling Valves

1) Quick couplers shall be provided in each area and shall be placed a maximum of 200' (two hundred feet) apart.

2) Quick couplers shall be placed inside a 10" (ten inches) in diameter minimum round valve box. The box shall have a minimum of 6" (six inches) clearance from walks and all other permanent structures.

J. Irrigation Heads

1) Standard spray irrigation heads are prohibited in the City of Rialto. Hi-efficiency spray heads such as rotators are discouraged but in some cases may be appropriate. However, their use will be reviewed by the City of Rialto on a case by case basis.

2) Rotator heads are not allowed within 24" (twenty-four inches) of hardscape and non-permeable surfaces. All rotator heads must be located according to the approved irrigation plan, unless it is impossible to do so due to unforeseen field conditions. All changes must be approved by the City of Rialto Representative.

3) Rotator heads shall be 12" (twelve inch) pop-up, or as per plan and be installed 1" (one inch) above finish grade. No less than 100% (one hundred percent) head to head coverage is acceptable.

4) Rotator heads installed at the toe of a slope shall be angled to spray effectively up slope, while maintaining head to head coverage.

5) Overspray onto sidewalks and streets by rotator heads in the public right of way shall not be permitted.

6) Check valves shall be installed in lower pop-up rotator heads in systems with over a 4' (four feet) grade change to prevent low head drainage.

7) All pop-up heads shall include an installed pressure regulating device (PRS).

8) All rotator heads shall be adjusted to 1" (one inch) above finish grade after soil settling has occurred.

9) All irrigation systems shall be designed and installed with no less than 100% (one hundred percent) head to head coverage, after head radius adjustment.

Failure to do so may result in additional heads being placed on the system at the expense of the contractor/developer.

K. Tree Irrigation

1) Deep root watering sleeves shall be installed flush with grade. Sleeves shall have removable vented covers. Sleeves shall be filled with pea gravel per detail.

2) Deep root watering sleeves shall be placed at the edge of planting hole and be equal distance from trunk of tree. A minimum of 2 (two) sleeves per tree.

L. Drip Irrigation

1) Shrub drip emitters shall be installed on polyflex risers at 2" (two inches) above finish grade. Emitters shall be placed at the edge of root ball without damaging the root ball in any way.

2) Subsurface drip line shall be buried to a depth of 2" (two inches) below finish grade unless it is to be covered by a minimum of 3" (three inches) of mulch or other permeable surface. Air relief valves and flush valves shall be installed per manufactures instructions.

M. Backflow Prevention Units

1) All backflow devices shall be installed with line size gate valves within the main assembly.

2) No backflow device will be permitted to stand in any area where it will be a hazard or maintenance problem to maintenance workers, pedestrians and or vehicular traffic.

3) Pressure pipe on the inlet side and discharge side of the backflow preventer shall be copper below ground and brass above ground.

4) Both the City of Rialto and West San Bernardino County Water district require above ground installations to be a minimum of 12" (twelve inches) – 18" (eighteen inches) above ground and must not exceed 30" (thirty inches) above ground. There must be a 12" (twelve-inch) horizontal space between test cock and any obstruction. Threaded union is required on supply line. Brass pipe is required on all above ground installation. Backflow devices shall be placed as close as possible to the water meter.

5) A backflow device shall be installed in accordance with the requirements set forth by all governing codes having jurisdiction over the work in the area.

Please contact the Water Department, which has jurisdiction over your area for exact specifications.

6) Backflow device shall be installed in a lockable steel cage. Box to be green and Strong Box type or approved equal.

N. Automatic Irrigation Controller

1) The irrigation system shall be programmed to operate during the periods of minimal use and time of least evaporation. Usually between 9pm and 3am.

2) The Contractor/Developer must furnish the electric meter for the controller and make all electrical connections in accordance with the Southern California Edison Company regulations.

3) The automatic controller shall be pedestal mounted inside a lockable, vandal resistant stainless steel enclosure (Le Meur model A or equal), minimum 10 (ten) gauge steel in an inconspicuous location.

O. Irrigation Controller Charts

1) On the inside surface of the cover of each automatic controller, the contractor shall prepare and mount a chart showing the valves and sprinkler heads serviced by the particular controller and showing actual as-built conditions. All valves shall be numbered to match the operation schedule and the drawings. Only those areas controlled by that controller shall be shown. This chart shall be an entire sprinkler plot plan including buildings, walks, roads and walls. A photo static print of this plan, reduced as necessary and legible in all detail, shall be made to a size that will fit into the controller cover. This print shall be hermetically sealed in plastic, each piece being a minimum 20 mils. In thickness, this shall be secured to the inside of the cover in a manner approved by the City of Rialto Representative.

2) 2 (two) sets of controller charts shall be prepared and turned over to the owner upon final acceptance of the project.

P. Flushing Main Lines

1) Flushing of the lines will be done before quick coupling valves or remote control valves are in place. All open ends shall be piped (temporarily) to exhaust flushing water up and out of the trench. Flushing procedure will be to first open the ports nearest source, then recap and move progressively towards the end of the line with only one port flushing at any one time.

Q. Post Installation Clean-up

1) Clean and adjust all heads to insure head to head coverage and eliminate overspray.

2) When the sprinkler system is complete, the contractor shall perform a coverage test in the presence of the City of Rialto representative to determine that the water coverage for planting areas is complete and adequate. This test shall be done before any planting and after the grading has been completed.

LANDSCAPE PLANTING

GENERAL REQUIREMENTS

A. Soils Test

Contractor shall obtain agronomic soils tests covering all planting areas after completion of finish grading and prior to start of soil preparation work. Tests shall be performed by an approved agronomic soils testing laboratory and shall include a fertility and suitability analysis with written recommendations for soil preparation and planting backfill mix. The soils report recommendations shall take precedence over minimum amendment and fertilizer application rates specified herein only when they exceed the specified minimums.

B. Soil Preparation

The contractor shall fine grade all planting areas, filling as needed or removing surplus dirt, removing rocks and debris over 1" (one inch) in diameter, and floating to a smooth and uniform grade. All areas shall slope to drain. All slopes shall be graded to eliminate water and soil runoff onto the sidewalk. Flow lines shall be established to existing road curbs or sidewalk, as shown on the plans and as directed. All fill material placed within the top 12" (twelve inches) from finished grade elevations in all planting areas shall be top soil.

C. Soil Amendment, Conditioner & Fertilizer Application

1) Nitrogen stabilized organic amendment shall be ground or processed wood product derived from wood of redwood, fir or cedar, treated with a non-toxic agent to absorb water quickly. Pine sawdust is not acceptable.

2) Inorganic soil conditioners shall be agricultural grade gypsum, soil sulfur and iron sulfate.

3) Planting tablets shall be tightly compressed long lasting, slow release fertilizer tablets weighing 21 (twenty-one) grams, with a potential acidity of not more

than 5% (five percent) by weight and having an analysis of 20-5-5. See planting section for recommended application rates.

D. Tree Requirements

1) All trees shall be located:

a. 30' (thirty feet) from beginning of the curb returns at street intersections.

b. 15' (fifteen feet) from light standards, underground utility vaults and power poles.

c. 10' (ten feet) from fire hydrant.

d. 5' (five feet) from sidewalks, buildings and walls.

e. 10' (ten feet) from driveways.

f. 10' (ten feet) from water and sewer lines, utility easements and utility meters.

2) All plant material shall meet the following specifications:

a. Plants shall be fresh, well established, vigorous and of normal habitat and growth, free of disease, insects, insect eggs and larva.

b. All plant material shall be as specified on the City of Rialto approved plans and specifications and shall be of the quantity and size indicated. No root-bound or undersized materials shall be allowed.

c. No plant material shall be planted until the irrigation system and final grading are complete and approved.

E. All container-grown trees shall be a minimum of 24" (twenty-four inch) box container size with minimum caliper and height in accordance with the American Standard for Nursery Stock for container plants.

F. All shrubs and vines shall be a minimum container size of 5 (five) gallons.

G. Ground cover shall be a minimum container size of 1 (one) gallon and be planted at a maximum distance of 24" (twenty-four inches) to 36" (thirty-six inches) on center spacing depending on species, refer to plans.

PLANTING REQUIREMENTS

A. Tree and Shrub Planting

1) Soil surrounding planting pit shall be in friable condition and moist to a depth of 8" (eight inches).

2) Backfill for trees and shrubs shall consist of 8 (eight) parts site soil to 2 (two) parts Nitrohumus. Backfill shall be screened to 1" (one inch) minus.

3) Backfill using specified soil mix to within 8" (eight inches) of finished grade. At this depth, place the plant fertilizer. Install planting tablets as follows:

5 gallon plants	3 tablets
15 gallon plants	6 tablets
24' boxed trees	8 tablets

4) Place the recommended number of tablets evenly around the perimeter of and immediately adjacent to, the root ball at a depth recommended above. Complete the backfilling, tamp and water.

5) Trees and shrubs shall be planted at such a depth that the root crowns bear the same or 1" (one inch) higher relative position to finished grade as they did to the soils where they were grown. Under no circumstances shall the root crown be buried.

6) All planter areas are to be treated with a pre-emergent chemical to be applied by a Licensed Pest Control Agent. This treatment shall be applied at the following times during the maintenance period: immediately after planting, at the beginning of the maintenance period and at the end of the maintenance period. All Weeds shall be removed from planting areas and receive approval of area by a City of Rialto representative before pre-emergents are applied.

7) Tree and shrub planting shall be in accordance with the planting detail approved by the City of Rialto.

8) Plant root balls shall be placed in the center of the hole in a vertical position with the root ball even with the finished grade.

9) Tree stakes shall be 2" (two inches) in diameter, 10' (ten feet) long lodge pole pine stakes, treated with approved wood preservative, free from knots, checks, splints or disfigurements. Stakes shall be driven a minimum of 4" (four inches) from the root ball when installed in the landscape.

10) Tree ties shall be cinch ties or equivalent and shall be securely nailed to support stakes.

11) Trees shall have root barriers installed when tree is within 8' (eight feet) of hardscape. Root barriers shall be 24" (twenty-four inches) deep and be a minimum of 20' (twenty feet) long. Root barriers should be extended from center line of tree a minimum of 10' (ten feet) to either side of the tree.

B. Palm Planting

1) Palm trees should be trimmed and tied prior to transporting to job site and planting. Palm fronds to be tied in at least 2 (two) spots and remain tied for a minimum of 60 (sixty) days after planting.

2) Palm trees shall be planted without use of fertilizers or soil amendments. Backfill shall consist of 50% (fifty percent) native soil and 50% (fifty percent) sand or sandy loam.

3) Palm trees should be planted with the root crown at or slightly below finish grade. Under no circumstance shall more than 6" (six inches) of the root crown be buried below finish grade.

4) Palms to be skinned of old fronds with straight trunks and upright and undamaged frond base.

5) Palm planting shall be in accordance with the planting detail approved by the City of Rialto.

C. Vine Planting

1) Soil surrounding planting pit shall be in friable condition and moist to a depth of 8" (eight inches).

2) Backfill for vines shall consist of 8 (eight) parts site soil to 2 (two) parts Nitrohumus. Backfill shall be screened to 1/4" (one-quarter inch) minus.

3) Vines shall be planted at such a depth that the root crowns bear the same or 1" (one inch) higher relative position to finished grade as they did to the soils where they were grown. Under no circumstances shall the root crown be buried.

4) Plant root balls shall be placed in the center of the hole in a vertical position with the root ball even with the finished grade.

5) Vines shall be attached to block walls using stainless steel bolts and washers in the wall with 10 (ten) gauge steel wire as per vine planting detail.

6) Vine planting shall be in accordance with the planting detail approved by the City of Rialto.

D. Ground Cover

1) Ground cover planted from 1 (one) gallon containers minimum is to be planted at a maximum of 24" (twenty-four inches) to 36" (thirty-six inches) on center spacing depending on species, refer to plans, in a triangular pattern.

2) Ground cover to be planted in soil that has been prepared per plans and has been graded to an even and level finish grade.

3) Soil in ground cover areas to be moist to a depth of 8" (eight inches) prior to planting.

E. Mowstrips

Mowstrips shall be 6"w x 6"d (six inches wide by six inches deep). Concrete shall consist of Portland cement, fine aggregate (sand), coarse aggregate and water proportioned and mixed to attain a 28 (twenty-eight) day compression strength of at least 2,500 (two thousand five hundred) pounds per square inch. Concrete shall not contain reactive aggregate or calcium chloride. Forms shall be free of warp, set plumb and true to line and grade with upper edges 1" (one inch) above specified grade of soil.

MAINTENANCE REQUIREMENTS

POST INSTALLATION REQUIREMENTS

A. After all work indicated on the contract drawings and herein specified, including all requirements by other departments has been completed, inspected and approved, the contractor shall maintain all planted areas by means of continuous watering, weeding, rolling, mowing, reseeding, cultivating, spraying, mulching, trimming, edging or other operations necessary for their care and upkeep for a period of 1 (one) year. The maintenance period shall be extended to include the time necessary to meet the requirements for completion as specified at no cost to the City of Rialto. A Start of Maintenance Date will be confirmed in writing by the Public Works Department.

B. A 1 (one) year maintenance surety bond will be required. The dollar amount of the bond will be determined by the Public Works Department and will be required at the time that the annexation is approved for one-year maintenance by the City of Rialto.

C. Permanent power service to the irrigation controller shall be established prior to the beginning of the maintenance period.

D. Maintenance period shall not begin until after the approval of installation.

E. If the project maintenance fails to continuously meet standard, as required for the start of maintenance, the maintenance period will be suspended until the contractor has corrected all deficiencies.

F. All dead plants shall be replaced immediately during the one-year period. Any material not acceptable at the completion of maintenance shall be replaced by the contractor at his cost.

G. All mulched areas shall be re-mulched as necessary to cover any bare spots that occur. Mulch shall be maintained over all drip irrigation line installation to a minimum of 3" (three inches). If drip line shows through mulch, area shall be re-mulched immediately to provide appropriate coverage.

H. Contractor shall keep all irrigation controllers, valves, lines and heads clean and in good working order, and any damage during maintenance period shall be repaired by the contractor at his cost.

I. Damage to planting areas such as depressions caused by vehicles, bicycles or foot traffic shall be filled and leveled. If planting areas become infested with

gophers or moles, the contractor shall exterminate the pests and the damage repaired.

J. All paved areas, including River Rock cobble, will be maintained in a neat and clean condition at all times. Sub-surface drains shall be periodically flushed with clear water to avoid build-up of silt debris. Debris and trash shall be removed from the site as needed on a minimum of once a week.

K. The contractor shall supply and apply a well balanced fertilizer at a rate of 7 lbs/1000 sq. ft. (seven pounds per one thousand square feet) for a minimum of 2 (two) applications per year. These will be in March and October.

L. Tree pruning shall conform to the National Arborist Association Standards. All tree pruning shall be performed in the presence of a certified arborist. All pruning shall be done per details.

M. Shrub pruning shall be done lightly in such a way as to keep the natural shape of the plant material. Shrubs shall not be pruned or sheared into balls or other unnatural shapes.

N. Shrubs shall be allowed to grow together into masses and not pruned into individual balls.

FINAL ACCEPTANCE REQUIREMENTS

(The following section shall be reproduced on landscape plans in full.)

1. End of Maintenance

A. On completion of the one-year maintenance period and when all the criteria required for the start of city maintenance has been met, the City of Rialto will inspect the project.

B. Deficiencies noted during inspection shall extend the contractor's maintenance period until all deficiencies are corrected.

C. End of maintenance shall occur only with written acceptance by the City of Rialto after being approved by the City Council.

2. Operation, Maintenance Manuals & Equipment

A. Within 15 (fifteen) calendar days prior to acceptance of construction requirements, the developer shall prepare and deliver to the City of Rialto all required descriptive material for the operation and maintenance relating to the project properly prepared in 2 (two) individually bound manuals. Each manual

shall describe the materials and equipment installed and shall be in sufficient detail to permit city *personnel to understand, operate and maintain all equipment. Related* manufacturer's information shall be included for each equipment item installed.

B. Each complete, bound manual shall include the following information:

1) Index sheet stating contractor's address and telephone, including names and addresses of local manufacturer's representative.

2) Complete operating and maintenance instructions on all major equipment.

3. Inspections

The contractor is responsible for contacting the City of Rialto Public Works Department representative at least 48 (forty-eight) hours or 2 (two) working days in advance of an anticipated inspection.

An inspection will be required at each of the steps listed below:

1) Irrigation system inspection, prior to electrical and PVC pipes being buried. If wires and pipes have been buried prior to inspection, the contractor may be required to uncover all lines.

2) Irrigation system pressure check.

3) Final grading inspection and irrigation coverage.

4) Plant material inspection and planting pit inspection.

5) Final installation inspection/start of the 1 (one) year maintenance period. This inspection shall be performed by the City of Rialto in the presence of the owner or his representative. Approval will be confirmed in writing by the City of Rialto.

6) Final acceptance/end of the 1 (one) year maintenance period. This inspection will be held prior to the acceptance of the project, which will be confirmed in writing by the City of Rialto.

Upon final acceptance by the City of Rialto the following items shall be furnished to the City:

1) As-built drawings.
2) 2 (two) Sets of Controller Charts.
3) Copies of water and electrical bills for the maintenance period.
4) 2 (two) controller keys.
5) Water Department inspection documentation.

6) Operation and maintenance manuals.

6)

WATER EFFICIENT LANDSCAPE WORKSHEET

1) Maximum Applied Water Allowance (MAWA) - *gallons per year*

MAWA = (ETo) (0.62) [(ETAF x LA) + ((1-ETAF) x SLA)]

ETo - Reference ET (inches per year) - *Use **55.6** ETo for City of Rialto*
ETAF ET Adjustment Factor – *0.55 for residential areas and 0.45 for non-residential areas*
LA - Total Landscape Area (square feet)
0.62 - Conversion Factor (to gallons per square feet)
SLA - Special Landscape Area (square feet)

2) Estimated Total Water Use (ETWU) - *gallons per year*

Hydrozone # /Planting Description[a]	Plant Factor (PF) *(See Table A)*	Irrigation Method[b]	Irrigation Efficiency (IE)[c]	ETAF (PF/IE)	Landscape Area (sq, ft,)	ETAF x Area	Estimated Total Water Use (ETWU)[e]
Regular Landscape Areas							
				Totals	(A)	(B)	
Special Landscape Areas							
				1			
				1			
				1			
				Totals	(C)	(D)	
						ETWU Total	
				Maximum Allowed Water Allowance (MAWA)[e]			

[a] ***Hydrozone #/Planting Description***
E.g
1.) front lawn
2.) low water use plantings
3.) medium water use planting

[b] ***Irrigation Method*** [c] ***Irrigation Efficiency*** *(See Table B)*
overhead spray 0.75 for spray head
or drip 0.81 for drip

[d] ***ETWU*** **(Annual Gallons Required) =** *Eto x 0.62 x ETAF x Area*

where 0.62 is a conversion factor that converts acre-inches per acre per year to gallons per square foot per year.

ETAF Calculations

Regular Landscape Areas

Total ETAF x Area	(B)
Total Area	(A)
Average ETAF	**B ÷ A**

Average ETAF for Regular Landscape Areas must be 0.55 or below for residential areas, and 0.45 or below for non-residential areas.

All Landscape Areas

Total ETAF x Area	(B+D)
Total Area	(A+C)
Sitewide ETAF	**(B+D) ÷ (A+C)**

Table A - PF (Plant Factor)

High Water Usage Plants	0.8	*can be between 0.7 - 0.9*
Moderate Usage Plants	0.5	*can be between 0.4 - 0.6*
Low Usage Plants	0.2	*can be between 0.1 - 0.3*
Very Low Usage Plants	0.1	*below 0.1*

Table B - IE (Irrigation Efficiency)

Spray Heads	*0.75*
Rotator Heads	*0.75*
Bubblers	*0.79*
Drip Emitters	*0.81*
Subsurface Irrigation	*0.85*

CITY OF RIALTO
LANDSCAPE MAINTENANCE DISTRICT
APPROVED PLANT LIST

PARKWAY TREES

Botanical Name	Parkway Width	Common Name
Acacia pendula	2-3'	Weeping Acacia
Acacia stenophylla	2-3'	Shoestring Acacia
Arbutus unedo marina	3-5'	Strawberry Tree
Albizia julibrissin	5-6'	Silk Tree
Alnus corda	8-12'	Italian Alder
Bauhinia variegata	2-3'	Orchid Tree
Callistemon citrinus	5-6'	Lemon Bottlebrush Tree
Cercis canadensis	2-3'	Eastern Redbud
Chorisia speciosa	8-12'	Floss Silk Tree
Chionanthus retusus	2-3'	Chinese Fringe Tree
Chitalpa tashkentensis	15-20'	Chitalpa Tree
Cinnamomum camphora	8-12'	Camphor Tree
Cupaniopsis anacardioides	5-6'	Carrotwood
Eriobotrya deflexa	2-3'	Bronze Loquat
Ginkgo biloba 'Autumn Gold'	5-6'	Maidenhair (Male Only)
Gleditsia triacanthos	5-6'	Honey Locust
Ilex altaclarensis 'Wilsonii'	5-6'	Wilson Holly
Koelreuteria bipinnata	8-12'	Chinese Flame Tree
Koelreuteria paniculata	8-12'	Goldenrain Tree
Lagerstroemia indica	2-3'	Crape Myrtle
Magnolia grandiflora 'St. Mary's'	2-3'	St. Mary's Magnolia
Melaleuca linariifolia	5-6'	Flaxleaf Paperbark
Melaleuca quinquenervia	5-6'	Cajeput Tree
Parkinsonia acuelata 'Desert Museum'	3-5'	Palo Verde Tree
Pinus canariensis	8-12'	Canary Island Pine
Pinus eldarica	8-12'	Mondell Pine
Pistacia chinensis	5-6'	Chinese Pistache
Platanus acerifolia "Bloodgood"	5-6'	London Plane Tree
Plantanus racemosa	5-6'	California Sycamore
Prosopis chilensis	5-6'	Thornless Chilean Mesquite
Quercus suber	5-6'	Cork Oak
Quercus virginiana	8-12'	Southern Live Oak.
Rhus lancea	5-6'	African Sumac
Robinia idahoensis	5-6'	Idaho Locust
Tristania laurina	2-3'	Swamp Myrtle
Tipuana tipu	5-6'	Tipu Tree
Tristania conferta	8-12'	Brisbane Box
Ulmus parvifolia 'True Green'	5-6'	Ever Green Elm
Umbellularia californica	5-6'	California Bay
Zelkova serrata	8-12'	Sawleaf Zelkova

SHRUBS

Acacia redolens 'Low Boy'	Prostrate Acacia
Achillea spp.	Yarrow
Agave Americana	Century Plant
Aloe striata	Coral Aloe
Anigozanthos flavidus	Kangaroo Paw
Arbutus unedo 'Compacta'	Strawberry Bush
Artemisia 'Powis Castle'	Wormwood
Baccharis pilularis 'Twin Peaks'	Coyote Bush
Buddleia davidii	Butterfly Bush
Caesalpinia gilliesii	Desert Bird of Paradise
Caesalpinia pulcherrima	Red Ponciana
Calamagrostis acutiflora 'Karl Foerster'	Feather Reed Grass
Callistemon citrinus	Lemon Scented Bottlebrush
Callistemon viminalis 'Little John'	Dwarf Bottlebrush
Cistus spp.	Rockrose
Cotoneaster buxifolius	Boxwood Cotoneaster
Dendromecon rigida	Bush Poppy
Dietes bicolor	Fortnight Lily
Dodonaea viscose	Hopseed Bush
Elaeagnus pungens	Silverberry
Encelia californica	California Sunflower
Hemerocallis hybrids	Daylily
Hesperaloe parviflora	Red Yucca
Justicia spicigera	Mexican Honeysuckle
Lantana montevidensis	Lantana
Lavatera assurgentiflora	Tree Mallow
Lavandula stoechas	Spanish Lavender
Leucophyllum frutescens 'Green Cloud'	Texas Ranger
Muhlenbergia rigens	Deer Grass
Opuntia littoralis	Coastal Prickly Pear
Plumbago auriculata	Cape Plumbago
Phormium tenax (shade only)	New Zealand Flax
Rhaphiolepis indica 'Ballerina'	Indian Hawthorn
Rhaphiolepis indica 'Clara'	Indian Hawthorn
Rhaphiolepis indica 'Majestic Beauty'	Indian Hawthorn
Rosa floribunda 'Iceberg'	White Shrub Rose
Rosa miniature	Miniature Roses
Rosa banksiae	Lady Banks' Rose
Rosmarinus officinalis 'Huntington Carpet'	Carpet Rosemary
Rosmarinus officinalis 'Tuscan Blue'	Tuscan Blue Rosemary
Rosmarinus officinalis 'Prostratus'	Prostrate Rosemary
Salvia greggii 'Furman's Red'	Furman's Red Autumn Sage
Salvia leucantha 'Santa Barbara'	Santa Barbara Sage
Scirpus californicus	California Bulrush
Verbena rigida	Rough Verbena
Westringia rosmariniformis	Coast Rosemary
Yucca spp.	Yucca
Zauschneria californica mexicana	California Fuchsia

GROUNDCOVER

Artemisia cacucasia	Caucasian Artemisia
Baccharis pilularis 'Pigeon Point'	Coyote Bush
Cerastium tomentosum	Snow-in-Summer
Cotoneaster dammeri 'Coral Beauty'	Cotoneaster
Dalea greggii	Trailing Indigo Bush
Drosanthemum floribundum	Rosea Iceplant
Gazania rigens leucolaena 'Uniflora'	Gazania
Lampranthus spectabilis	Trailing Iceplant
Myoporum parvifolium	Low Myoporum
Oscularia deltoides	Vygie Iceplant
Rosa Groundcover	Groundcover Rose
Rosmarinus officinalis 'Huntington Carpet'	Carpet Rosemary
Senecio mandraliscae	Blue Chalk Sticks
Verbena pulchella gracilior	Moss Verbena

VINES

Bignonia violacea	Purple Trumpet Vine
Distictis buccinatoria	Scarlet Trumpet Vine
Ficus pumila	Creeping Fig
Gelsemium sempervirens	Carolina Jessamine
Parthenocissus tricuspidata	Boston Ivy

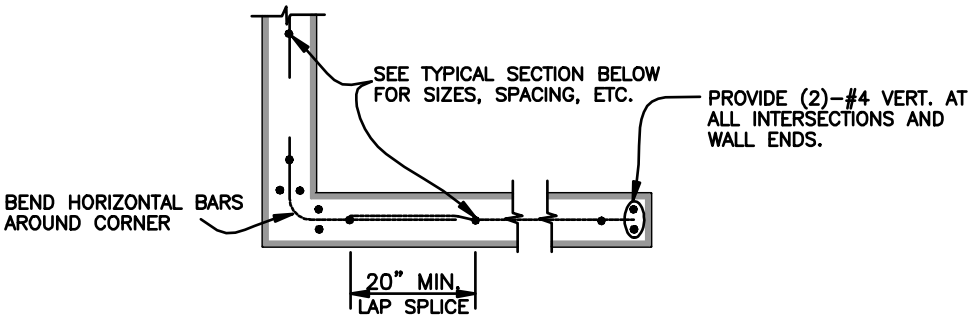

CORNER BOND BEAM

N.T.S.

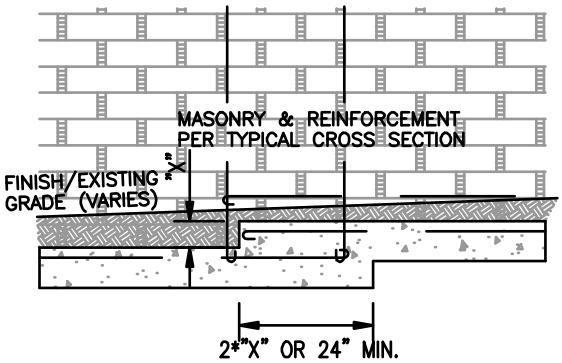

TYPICAL STEP FOOTING

N.T.S.

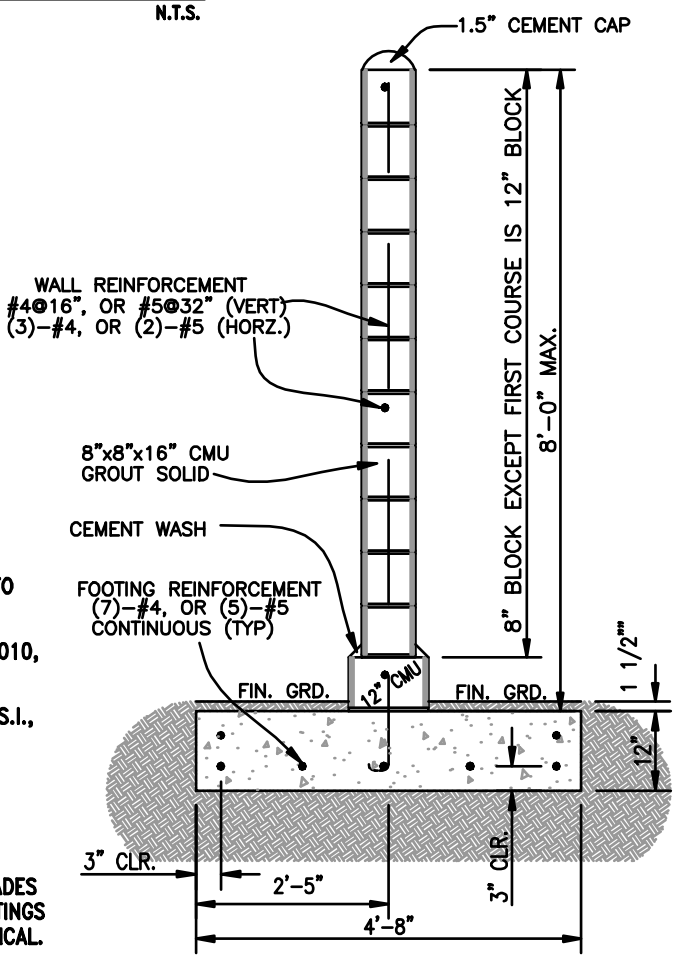

TYPICAL CROSS SECTION

GENERAL NOTES:

1. A BUILDING PERMIT SHALL BE OBTAINED FOR CONSTRUCTION PRIOR TO ANY WORK ON THE SITE FOR THIS MASONRY WALL
2. WALL DESIGNED FOR 130 M.P.H. WIND SPEED PER IBC 2008, CBC 2010, & ASCE 7–05.
3. GRADE "A" MASONRY UNITS THROUGHOUT, DESIGN STRENGTH 750 P.S.I., WITH NO SPECIAL INSPECTION REQUIRED PER SECTION 21, IBC.
4. TYPE "S" MORTAR PER SECTION 21, IBC.
5. DEFORMED REINFORCING STEEL 20,000 P.S.I. IN ACCORDANCE WITH APPLICABLE IBC SPECIFICATIONS.
6. FOOTING TO BE POURED A MIN. OF 12" BELOW BOTH FIN.&NAT. GRADES WHICHEVER IS GREATER, IN COMPACT NATURAL CUT SOIL. STEP FOOTINGS SHALL LAP 24" MIN. & NOT EXCEED 2:1 IN STEPS, HORIZ. TO VERTICAL.
7. PORTLAND CEMENT CONCRETE 28 DAY DESIGN STRENGTH fs=2,000 P.S.I., 5 SACK MIX, MAX. 7.5 GALS. WATER PER SACK, 1:2.5:4 MIXTURE FOR FOOTINGS.
8. FILL ALL CELLS WITH PEA GRAVEL CONCRETE GROUT fc'=2,000 P.S.I., 6 SACK MIX, WITH WATER ADDED TO ALLOW FLOW WITHOUT SEGREGATION OF AGGREGATES. 1:2:2 MIX.
9. DESIGN IS BASED ON NO SURCHARGE WITHIN 6 FEET.

NOT TO SCALE

APPROVED BY:

6/28/16

P.W. DIRECTOR/CITY ENGINEER DATE

8' HIGH BLOCK WALL

REVISIONS

DATE	BY	MARK	APPROVED

CITY OF RIALTO, CALIFORNIA
PUBLIC WORKS DEPARTMENT
ENGINEERING DIVISION

STANDARD NO. BW–800 | SHT 1 OF 1

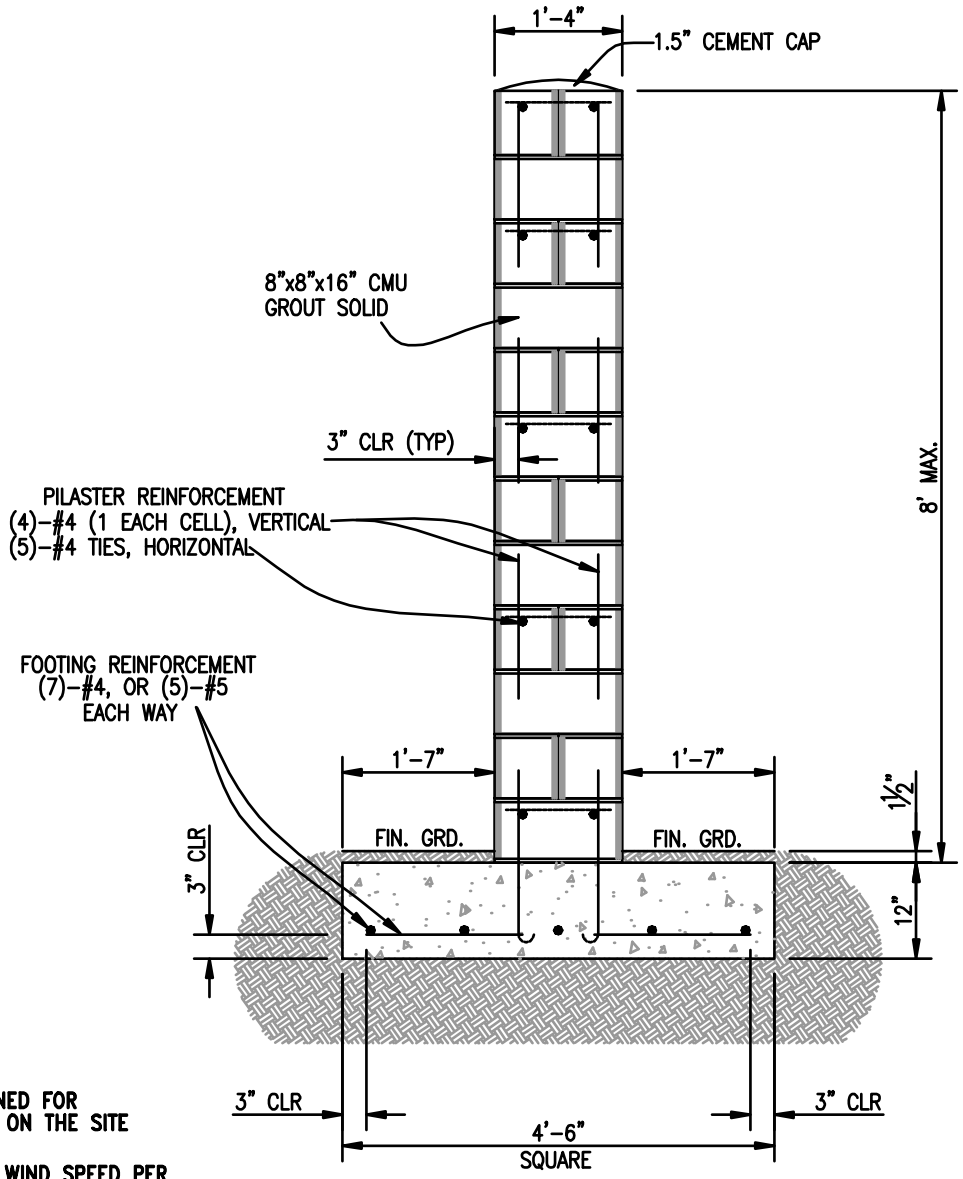

TYPICAL CROSS SECTION

N.T.S.

GENERAL NOTES:

1. A BUILDING PERMIT SHALL BE OBTAINED FOR CONSTRUCTION PRIOR TO ANY WORK ON THE SITE FOR THIS MASONRY STRUCTURE.
2. PILASTER DESIGNED FOR 130 M.P.H. WIND SPEED PER IBC 2008, CBC 2010, & ASCE 7-05.
3. GRADE "A" MASONRY UNITS THROUGHOUT, DESIGN STRENGTH 750 P.S.I., WITH NO SPECIAL INSPECTION REQUIRED PER SECTION 21, IBC.
4. TYPE "S" MORTAR PER SECTION 21, IBC.
5. DEFORMED REINFORCING STEEL 20,000 P.S.I. IN ACCORDANCE WITH APPLICABLE IBC SPECIFICATIONS.
6. FOOTING TO BE POURED A MIN. OF 12" BELOW BOTH FIN.&NAT. GRADES WHICHEVER IS GREATER, IN COMPACT NATURAL CUT SOIL. STEP FOOTINGS SHALL LAP 24" MIN. & NOT EXCEED 2:1 IN STEPS, HORIZ. TO VERTICAL.
7. PORTLAND CEMENT CONCRETE 28 DAY DESIGN STRENGTH fs=2,000 P.S.I., 5 SACK MIX, MAX. 7.5 GALS. WATER PER SACK, 1:2.5:4 MIXTURE FOR FOOTINGS.
8. FILL ALL CELLS WITH PEA GRAVEL CONCRETE GROUT fc'=2,000 P.S.I., 6 SACK MIX, WITH WATER ADDED TO ALLOW FLOW WITHOUT SEGREGATION OF AGGREGATES. 1:2:2 MIX.
9. DESIGN IS BASED ON NO SURCHARGE WITHIN 6 FEET.
10. SPACING OF PILASTERS SHALL NOT EXCEED 12 FEET O.C.; WROUGHT IRON FENCING BETWEEN PIERS TO BE 1.5" WIDE TUBE (MAX), SPACED NO LESS THAN 4" O.C.

NOT TO SCALE

APPROVED BY:

6/28/16

P.W. DIRECTOR/CITY ENGINEER DATE

REVISIONS

DATE	BY	MARK	APPROVED

8' HIGH BLOCK PILASTER

CITY OF RIALTO, CALIFORNIA
PUBLIC WORKS DEPARTMENT
ENGINEERING DIVISION

STANDARD NO. BW-801 | SHT 1 OF 1